Operating Instructions

Exicom Open HMI ET-406, ET-416, ET-436
(valid for Hardware Revision 1.xx)

R. STAHL HMI Systems GmbH
Im Gewerbegebiet Pesch 14
50767 Köln

Version **1.6E**
Issue: **14.11.2007**

Table of contents

	Description	Page
	Table of contents	2
1	Preface	4
2	Exicom Open HMI ET-406, ET-416, ET-436	4
2.1	Device function	4
2.2	General Information	4
2.2.1	Licensing issues	4
2.2.2	Recovery Stick	4
2.2.3	Initial start-up	4
2.2.4	Keyboard features	5
2.3	Technical details	5
2.4	Product identification and conformity to standards	6
2.4.1	ATEX	6
2.4.2	NEC	6
2.4.2.1	UL (Underwriters Laboratories)	6
2.4.3	IEC	7
2.4.3.1	Inmetro (UL do Brasil Certificações)	7
2.4.4	GOST R	7
2.5	Power supply	7
2.5.1	Operator interfaces	7
2.5.2	Reader modules	7
2.6	Permitted maximum values	8
2.6.1	External, non-intrinsically safe circuits	8
2.6.2	External inherently safe optical interface	8
2.6.3	External intrinsically safe circuits	9
2.7	Type code	14
2.8	Safety Advice	15
2.8.1	Installation and operation	15
2.8.2	Special conditions	16
2.8.3	Software installation	16
2.8.3.1	Software installation using a USB Memory Stick	16
2.8.3.2	Software installation with external USB devices	16
2.8.4	USB interfaces	17
2.8.4.1	I.S. USB interfaces USB0, USB2	17
2.8.4.2	Ex-e USB interfaces USB1, USB3	17
3	Installation	19
3.1	General information	19
3.2	ET-406, ET-416, ET-436	19
4	Application	20
5	Assembly and disassembly	20
5.1	General information	20
5.2	Cut-out ET-4x6	20
6	Operation	20

 © R. STAHL HMI Systems GmbH / OperatingInstruction_Exicom_OpenHMI_en_V_1_6_E.doc / 14.11.2007

6.1	General information	20
6.2	Connections ET-4x6	21
6.2.1	Dip switch settings S3 and S4	22
6.3	Connections Ex-e terminals (X12)	23
6.3.1	Connection details of the Ex-e terminals	23
6.3.2	Cable types and cross sections	23
7	Maintenance, service	24
7.1.1	Servicing	24
8	Troubleshooting	24
9	Disposal	25
9.1.1	ROHS directive 2002/95/EC	25
9.1.2	China ROHS labeling	25
10	Accessories	26
10.1	Phoenix Contact terminal block	26
10.1.1	Data sheet Mini-Ex-terminal	26
11	Certificates	28
11.1	Exicom ET-406, ET-416, ET-436	28
11.1.1	Declaration of EC conformity	28
11.1.2	EC type examination certificate	29
11.1.3	UL certificate	38
11.1.3.1	UL control drawing	39
11.1.4	UL do Brasil certificate	46
11.1.5	Gost certificate	47
11.2	Phoenix Contact terminal block	49
11.2.1	EC type examination certificate	49

1 Preface

These operating instructions cover all aspects relevant to explosion protection. Please refer to the additional documentation such as the EC type examination certificate or the hardware manual for further information concerning connections and installation.

2 Exicom Open HMI ET-406, ET-416, ET-436

2.1 Device function

The ET-406 / ET-416 / ET-436 operator interfaces are intelligent display and operating devices which can run any software. They are certified according to ATEX directive 94/9/EC for installation in hazardous areas of zones 1, 2, 21 and 22.

The ET-406 / ET-416 / ET-436 operator interfaces can also be used as thin clients in a remote terminal environment. As a standard, all Open HMIs are equipped with a touch screen and several interfaces, are based on the powerful Pentium / Celeron M technology (up to 1.1 GHz clock frequency), which makes them the most powerful devices on the market. Their modular structure makes changes and maintenance easy.

2.2 General Information

2.2.1 Licensing issues

The Open HMI series operator interfaces are fully pre-installed with the Windows XP Embedded or Windows XP Professional operating systems.
The license sticker is affixed on the back of the operator interface, next to the type plate.
Please note that according to the license issued for Windows XP Embedded the application of this system as an Office PC is not permitted.

2.2.2 Recovery Stick

☞ To restore your Open HMI device to its original state you will need a Recovery Stick, which is available as an optional extra. This recovery stick (USB-drive, also available intrinsically safe) contains the factory image, with which the system can be restored to delivery status within a very short time.
Please note that you can restore the operator interfaces to their original state **only** with the aid of the Recovery Stick.

☞ As an option, the recovery stick can also contain a backup software, with which you can back up your own device configuration.

2.2.3 Initial start-up

When the device is started for the first time, a Wizard starts where users have to select certain settings.
Please follow the instructions of the Wizard carefully.

For further information regarding this Wizard please refer to the OpenHMI_help_en.chm help file on the CD that is delivered with the device.
You will find the file on the CD in the following directory:
Handbuecher_Manuals\Software_eng\

2.2.4 Keyboard features

☞ Pressing two keys at once (e.g. F1 + F7) is not supported by the operator interfaces !
In such a case, the system considers the key that was pressed first as "active" and implements the associated functions and / or key bit functions !
The key pressed second is ignored.

☞ Pressing any three of the following keys at the same time has the same effect as pressing Ctrl + Alt + Del !
The keys are: F1, F2, F7 and F8.

ET-406 only:

☞ Pressing the S1 – S10 softkeys on the ET-406 has the same effect as pressing the numerical keys 0 – 9.

☞ As an alternative, you may also allocate the Shift + F1 – Shift + F10 functions to the S1 – S10 keys.
If this is required, it must be stated when ordering, as it can only be done by the manufacturer **before delivery**.

2.3 Technical details

☞ Display: ET-406: 10.4" TFT Touch Color Display, resolution: SVGA 800x600 pixels
ET-416: 10.4" TFT Touch Color Display, resolution: SVGA 800x600 pixels
ET-436: 15" TFT Touch Color Display, resolution: XGA 1024x768 pixels

☞ Touch Screen: 8-wire analogue resistive

☞ CFL backlight

☞ Keyboard: Polyester membrane on FR4 material, > 1 million actions
ET-406: 12 blank function keys that can be customized,
10 soft keys, alphanumerical block
ET-416: 12 function keys
ET-436: 8 function keys

☞ Processor: Pentium/Celeron M

☞ Main memory: 1GB RAM

☞ Data memory: 2GB, 4GB or 8GB Flash

☞ global, multilingual language support

☞ Interfaces:
COM1: RS-232/422/485
COM2: RS-232/422/485 (not simultaneously)
plug-in modules for readers (barcode scanner, Wiegand reader or Proximity reader (optional))
2x USB Ex-e; 2x USB I.S.
Ethernet (op is) optical fiber interface
PS2 interface for external I.S. keyboard (optional)

☞ Housing protection type: IP 65 according to EN 60529; front: IP66

☞ Temperature range –10 ... +50 °C

☞ 24V DC (20.4 VDC...28.8 VDC) power supply directly in integrated Ex-e terminal box

2.4 Product identification and conformity to standards

Manufacturer: R. STAHL HMI Systems GmbH
Type code: ET-406 / ET-416 / ET-436

The ET-406 / ET-416 / ET-436 operator interfaces have the following Ex classification and complies with the standards and directives to:

2.4.1 ATEX

Classification:

CE classification: CE 0158
Testing authority and certificate number: TÜV 05 ATEX 7176 X
Ex classification: Ex II 2 (2) G Ex d e mb ib [ib] [op is] IIC T4
Ex II 2 D Ex tD A21 IP65 T90°C

Standard and directive:

- directive 94/9 EC
- EN 60079-0 : 2004 (General requirements)
- EN 60079-1 : 2004 ("d")
- EN 60079-7 : 2003 ("e")
- EN 60079-18 : 2004 ("m")
- prEN 60079-28 : 2005 ("optical radiation“)
- EN 50020 : 2002 ("i")
- prEN 61241-0 : 2004 (dust)
- EN 61241-1 : 2004 (dust)

2.4.2 NEC

2.4.2.1 UL (Underwriters Laboratories)

Classification:

Certificate number: 2006-12-07 E307676
Number of control drawing: 2006 33 7000 0
Ex classification: Class I, Zone 1, AEx d e m ib [ib] IIC T4
Class I, Division 2, Group A, T4

Standard and directive:

- NEC 505
- UL 508
- UL 60079-0
- UL 60079-1
- UL 60079-7
- UL 60079-11
- UL 60079-18
- ANSI/ISA-12.12.01-200

2.4.3 IEC

2.4.3.1 Inmetro (UL do Brasil Certificações)

Classification:

Certificate number:	06/UL-BRCR-0001
Ex classification:	BR-Ex d e mb ib [ib] IIC T4 -10 °C ≤ Tamb ≤ +60 °C

Standard and directive:

- IEC 60079-0 : 2000
- IEC 60079-1 : 2001
- IEC 60079-7 : 2001
- IEC 60079-11 : 1999
- IEC 60079-18 : 2004

2.4.4 GOST R

Classification:

Certificate number:	ROSS DE.GB04.V00566
Ex classification:	2Exdemib[ib]sIICT4X DIP A21 T_A90 °C, IP65

Standard and directive:

- GOST R 51330.0-99
- GOST R 51330.1-99
- GOST R 51330.8-99
- GOST R 51330.10-99
- GOST R 51330.14-99
- GOST R 51330.17-99
- GOST R МЭК 61241-1-1-99
- GOST R 22782.3-77

2.5 Power supply

2.5.1 Operator interfaces

Power supply: 24.0 VDC (min. 20.4 VDC; max. 28.8 VDC)
Power consumption: max. 2.4 A

2.5.2 Reader modules

a) WCR1 external power supply module with intrinsically safe power supply circuit and the following maximum values:
U_O = 12.4 VDC I_O = 200 mA

b) RSi1 internal intrinsically safe power supply circuit
U_O = 10.4 VDC I_O = 220 mA

2.6 Permitted maximum values

2.6.1 External, non-intrinsically safe circuits

Input voltage (X1):

Rated voltage	24 VDC (+20% / -15%)
Power consumption for U_{rated}	2.4 A max
Max. operating voltage U_m	30 VDC

RS-422/-232 COM 1 (X2):

Rated voltage	RS-422: 5 VDC	RS-232: ±12 VDC
Max. operating voltage U_m	253 VAC	

RS-422/-232 COM 2 (X3):

Rated voltage	RS-422: 5 VDC	RS-232: ±12 VDC
Max. operating voltage U_m	253 VAC	

USB-1 (X5):

Rated voltage	5 VDC
Max. operating voltage U_m	253 VAC

USB-3 (X7):

Rated voltage	5 VDC
Max. operating voltage U_m	253 VAC

2.6.2 External inherently safe optical interface

Ethernet optical fiber (X10):

Rated voltage	5 VDC
Wavelength	1350 nm
Radiant power	≤ 35 mW

 © R. STAHL HMI Systems GmbH / OperatingInstruction_Exicom_OpenHMI_en_V_1_6_E.doc / 14.11.2007

2.6.3 External intrinsically safe circuits

USB-0 (X4):

The maximum values for group IIC are:

U_i	=	-	V		U_o	=	5.9	V		
I_i	=	-	mA		I_o	=	1.02	A		
P_i	=	-	mW		P_o	=	6.02	W		
C_i	=	0	µF		C_o	=	8	13	30	43	µF
L_i	=	0	mH		L_o	=	10	5	2	1	µH

C_o and L_o pairs directly above/underneath each other may be used.

The maximum values for group IIB are:

U_i	=	-	V		U_o	=	5.9	V		
I_i	=	-	mA		I_o	=	1.02	A		
P_i	=	-	mW		P_o	=	6.02	W		
C_i	=	0	µF		C_o	=	14	26	50	89	µF
L_i	=	0	mH		L_o	=	0.1	0.05	0.02	0.01	mH

C_o and L_o pairs directly above/underneath each other may be used.

USB-2 (X6):

The maximum values for group IIC are:

U_i	=	-	V		U_o	=	5.9	V		
I_i	=	-	mA		I_o	=	1.02	A		
P_i	=	-	mW		P_o	=	6.02	W		
C_i	=	0	µF		C_o	=	8	13	30	43	µF
L_i	=	0	mH		L_o	=	10	5	2	1	µH

C_o and L_o pairs directly above/underneath each other may be used.

The maximum values for group IIB are:

U_i	=	-	V		U_o	=	5.9	V		
I_i	=	-	mA		I_o	=	1.02	A		
P_i	=	-	mW		P_o	=	6.02	W		
C_i	=	0	µF		C_o	=	14	26	50	89	µF
L_i	=	0	mH		L_o	=	0.1	0.05	0.02	0.01	mH

C_o and L_o pairs directly above/underneath each other may be used.

Reader (X8) +Uint 1 (power supply circuit, X8.0):

The maximum values for group IIC are:

U_i	=	-	V		U_o	=	10.4	V
I_i	=	-	mA		I_o	=	220	mA
P_i	=	-	mW		P_o	=	2.29	W
C_i	=	-	µF		C_o	=	2.41	µF
L_i	=	-	mH		L_o	=	0.02	mH

The maximum values for group IIB are:

U_i	=	-	V		U_o	=	10.4	V
I_i	=	-	mA		I_o	=	220	mA
P_i	=	-	mW		P_o	=	2.29	W
C_i	=	-	µF		C_o	=	12	µF
L_i	=	-	mH		L_o	=	50	µH

Reader WCR1 (connection voltage supply, X8.1–2):

The maximum values for group IIC are:

U_i	=	12.4	V		U_o	=	-	V
I_i	=	200	mA		I_o	=	-	mA
P_i	=	-	mW		P_o	=	-	mW
C_i	=	0	µF		C_o	=	-	µF
L_i	=	0	mH		L_o	=	-	mH

The maximum values for group IIB are:

U_i	=	12.4	V		U_o	=	-	V
I_i	=	200	mA		I_o	=	-	mA
P_i	=	-	mW		P_o	=	-	mW
C_i	=	0	µF		C_o	=	-	µF
L_i	=	0	mH		L_o	=	-	mH

 © R. STAHL HMI Systems GmbH / OperatingInstruction_Exicom_OpenHMI_en_V_1_6_E.doc / 14.11.2007

Reader WCR1 (power supply Reader, X8.3-4):

The maximum values for group IIC are:

U_i	=	-	V		U_o	=	5.88	V
I_i	=	-	mA		I_o	=	200	mA
P_i	=	-	mW		P_o	=	1.18	W
C_i	=	4.6	µF		C_o	=	28.4	µF
L_i	=	100	nH		L_o	=	1.9	µH

The maximum values for group IIB are:

U_i	=	-	V		U_o	=	5.88	V
I_i	=	-	mA		I_o	=	200	mA
P_i	=	-	mW		P_o	=	1.18	W
C_i	=	4.6	µF		C_o	=	56.4	µF
L_i	=	100	nH		L_o	=	19.9	µH

Reader WCR1 (signal input / output, X8.5-8):

The maximum values for group IIC are:

U_i	=	15	V		U_o	=	5.88	V
I_i	=	500	mA		I_o	=	56	mA
P_i	=	2.5	W		P_o	=	83	mW
C_i	=	0	µF		C_o	=	34	µF
L_i	=	0	mH		L_o	=	2	µH

The maximum values for group IIB are:

U_i	=	15	V		U_o	=	5.88	V
I_i	=	500	mA		I_o	=	56	mA
P_i	=	2.5	W		P_o	=	83	mW
C_i	=	0	µF		C_o	=	63	µF
L_i	=	0	mH		L_o	=	20	µH

Reader RSi1 (connection voltage supply, X8.1–2):

The maximum values for group IIC are:

U_i	=	12.4	V		U_o	=	-	V
I_i	=	220	mA		I_o	=	-	mA
P_i	=	2.7	W		P_o	=	-	mW
C_i	=	0	µF		C_o	=	-	µF
L_i	=	0	mH		L_o	=	-	mH

The maximum values for group IIB are:

U_i	=	12.4	V		U_o	=	-	V
I_i	=	220	mA		I_o	=	-	mA
P_i	=	2.7	W		P_o	=	-	mW
C_i	=	0	µF		C_o	=	-	µF
L_i	=	0	mH		L_o	=	-	mH

Reader RSi1 (power supply Reader, X8.3–4):

The maximum values for group IIC are:

U_i	=	-	V		U_o	=	5.4	V
I_i	=	-	mA		I_o	=	220	mA
P_i	=	-	W		P_o	=	1.19	W
C_i	=	4.2	µF		C_o	=	39.8	µF
L_i	=	100	nH		L_o	=	1.9	µH

The maximum values for group IIB are:

U_i	=	-	V		U_o	=	5.4	V
I_i	=	-	mA		I_o	=	220	mA
P_i	=	-	W		P_o	=	1.19	W
C_i	=	4.2	µF		C_o	=	69.8	µF
L_i	=	100	nH		L_o	=	19.9	µH

 © R. STAHL HMI Systems GmbH / OperatingInstruction_Exicom_OpenHMI_en_V_1_6_E.doc / 14.11.2007

Reader RSi1 (signal input / output, X8.5-8):

The maximum values for group IIC are:

U_i	=	15	V		U_o	=	5.4	V
I_i	=	500	mA		I_o	=	49	mA
P_i	=	2.5	W		P_o	=	62	mW
C_i	=	0	µF		C_o	=	45	µF
L_i	=	0	mH		L_o	=	2	µH

The maximum values for group IIB are:

U_i	=	15	V		U_o	=	5.4	V
I_i	=	500	mA		I_o	=	49	mA
P_i	=	2.5	W		P_o	=	62	mW
C_i	=	0	µF		C_o	=	78	µF
L_i	=	0	mH		L_o	=	20	mH

Keyboard (X9):

The maximum values for group IIC are:

U_i	=	-	V		U_o	=	5.9	V	
I_i	=	-	mA		I_o	=	200	mA	
P_i	=	-	mW		P_o	=	1.18	W	
C_i	=	14	µF		C_o	=	19	29	µF
L_i	=	0	mH		L_o	=	2	1	µH

C_o and L_o pairs directly above/underneath each other may be used.

The maximum values for group IIB are:

U_i	=	-	V		U_o	=	5.9	V		
I_i	=	-	mA		I_o	=	200	mA		
P_i	=	-	mW		P_o	=	1.18	W		
C_i	=	14	µF		C_o	=	13	23	46	86	µF
L_i	=	0	mH		L_o	=	100	50	20	10	µH

C_o and L_o pairs directly above/underneath each other may be used.

☞ Please note !
- The terminal name for the keyboard as listed on the TÜV 05 ATEX 7176 X EC-type examination certificate is wrong !
  "X7" is incorrect, the correct terminal name is X9 !

☞ Do **NOT** connect the optional external keyboard to live equipment !

2.7 Type code

Exicom ET-xxx-***

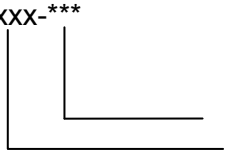

Plug-in module 1 (optional)
406 / 416 / 436

Product type:

Version	Plug-in module
Exicom ET-xxx	-
Exicom ET-xxx-RSi	Barcode or proximity reader
Exicom ET-xxx-WCR	Wiegand reader

 © R. STAHL HMI Systems GmbH / OperatingInstruction_Exicom_OpenHMI_en_V_1_6_E.doc / 14.11.2007

2.8 Safety Advice

This chapter is a summary of the key safety measures. The summary is supplementary to existing rules which staff also have to study.
The safety of persons and equipment in hazardous areas depends on compliance with all relevant safety regulations. Thus, the installation and maintenance staff carry a particular responsibility, requiring precise knowledge of the applicable regulations and conditions.

2.8.1 Installation and operation

Please note the following when installing and operating the device:

- During assembly and operation of the operator interface electrostatic surface charging must not exceed that caused by manual rubbing.
- The national regulations for installation and assembly apply (e.g. EN 60079-1).
- The operator interfaces may be installed in zones 1, 2, 21 or 22.
- The intrinsically safe circuits must be installed according to applicable regulations.
- The operator interface must only be switched on when it is closed.
- When installed in zones 1, 2, 21 and 22, intrinsically safe devices suitable for zones 1, 2, 21 and 22 may be connected to the intrinsically safe power supply circuits.
- The safe maximum values of the connected field device(s) must correspond to the values listed on the data sheet or the EC type examination certificate.
- Interconnecting several active devices in an intrinsically safe circuit may result in different safe maximum values. This could compromise intrinsic safety !
- After switching the operator interface off, wait for at least 10 minutes before opening it.
- Before opening the housing lid users must ensure that all non-intrinsically safe circuits have been switched off. Circuits supplied from different sources may be connected !
  Please note that all associated equipment (such as the SK-KJ1710, for example) must also be switched off !
- National safety and accident prevention rules.
- Generally accepted technical rules.
- Safety instructions contained in these operating instructions.
- Any damage may compromise the explosion protection !

Use the operator interface for its intended purpose only (see "Function").
Incorrect or unauthorized use and non-compliance with the instructions in this manual will void any warranty on our part.
No changes may be made to the operator interface or its components that compromise explosion protection !
The operator interface may only be installed and operated in an undamaged, dry and clean condition !

2.8.2 Special conditions

- The housing of the operator interface must be protected against prolonged UV radiation.
- The operator interface and any connected equipment must be incorporated into the same potential equalization system (see installation example in the Hardware Manual). An alternative would be to connect only devices that are safely isolated from earth potential.

2.8.3 Software installation

Installation of software on the operator interfaces:

2.8.3.1 Software installation using a USB Memory Stick

You may only use USB memory sticks permitted for use by R. STAHL HMI Systems GmbH. These USB memory sticks are below and in general referred to by R. STAHL HMI Systems GmbH as "USB(i) Drives". Data may only be copied onto the operator interfaces and software may only be installed with these USB Drives.

- In hazardous areas you may only use I.S. certified USB Drives supplied by R. STAHL HMI Systems GmbH.
- In an industrial area, a permitted, non-explosion proof memory stick may be connected to the I.S. USB interface of the operator interface after having been connected to any PC.

If devices are connected to the I.S. USB interface that have not been approved by R. STAHL HMI Systems GmbH, protective elements may become damaged, thus compromising the intrinsic safety of the interfaces.
In this case R. STAHL HMI Systems GmbH can no longer guarantee the intrinsic safety of the device.

2.8.3.2 Software installation with external USB devices

Software may be installed with the aid of any external USB devices subject to the following conditions:

- The software is installed in the safe area.
- The USB devices are connected to the Ex-e USB interfaces USB1 or USB3 (X5 or X7) with the VB-USB-INST1 connection cable.

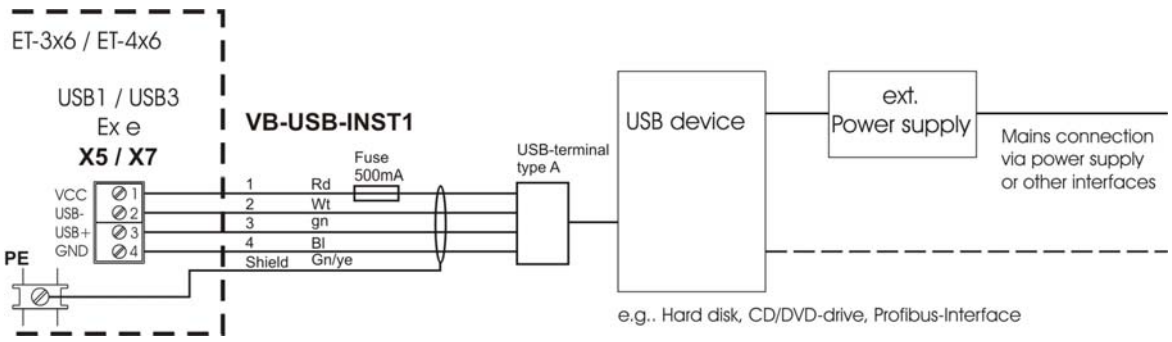

Connection diagram with VB-USB-INST1 (hard disk, CD/DVD with power supply)

2.8.4 USB interfaces

The ET-4x6 operator interfaces have 4 USB interface channels.

- USB0 at X4 for the internal connection of a USB Drive.
- USB1 at X5 for the connection of external USB devices.
- USB2 at X6 for the connection of an external USB Drive.
- USB3 at X7 for the connection of external USB devices.

📖 The connection diagram for the ET-4x6 interfaces can be found in Chapter 6.2, connections ET-4x6.

2.8.4.1 I.S. USB interfaces USB0, USB2

The USB0 and USB2 I.S. USB interfaces (X4 and X6) are intended for the internal or external connection of USBi Drives.

The maximum value for the joint power supply of USB0 and USB2 is 500 mA.

2.8.4.2 Ex-e USB interfaces USB1, USB3

The USB1 and USB3 Ex-e USB interfaces (X5 and X7) are intended for the connection of external USB devices.

The maximum value for the joint power supply of USB1 and USB3 is 500 mA.

2.8.4.2.1 Connection variations for Ex-e USB interfaces

Both Ex-e USB interfaces have an identical structure. The X5 (USB 1) and X7 (USB 3) terminals are for the connection of devices that can be both intrinsically safe or not intrinsically safe.
The following versions are possible:

1. If a USB device that is not connected to the mains is connected, voltage can be supplied from the internal power supply (terminal 1).
2. If a USB device that is connected to the mains is connected, the internal power supply (terminal 1) must not be connected. The power must then be supplied externally.

- The interrupting capacity of the fuses of the internal USB power supplies is 1.5 kA.
- The tripping characteristic of the fuses is T (time-lag, type T fuse).
- The USB accessory parts are fitted inside an appropriate housing.

2.8.4.2.2 Connection terminal of protection type "e" (EN 60079-7):

The X5 and X7 connection terminals have protection type "e".

Flexible cables with a cross section of 0.2 – 2.5 mm² can be used.

The maximum cable length for the connection with the Ex-e USB interfaces (X5 and X7) is 2.5 m.

The insulation of the wire must reach right up to the terminal body.

2.8.4.2.2.1 Type 1 connection version

- The USB device does not require an external power supply as it uses less than 500 mA.
- No connection to the mains via other interfaces, e.g. WLAN stick.

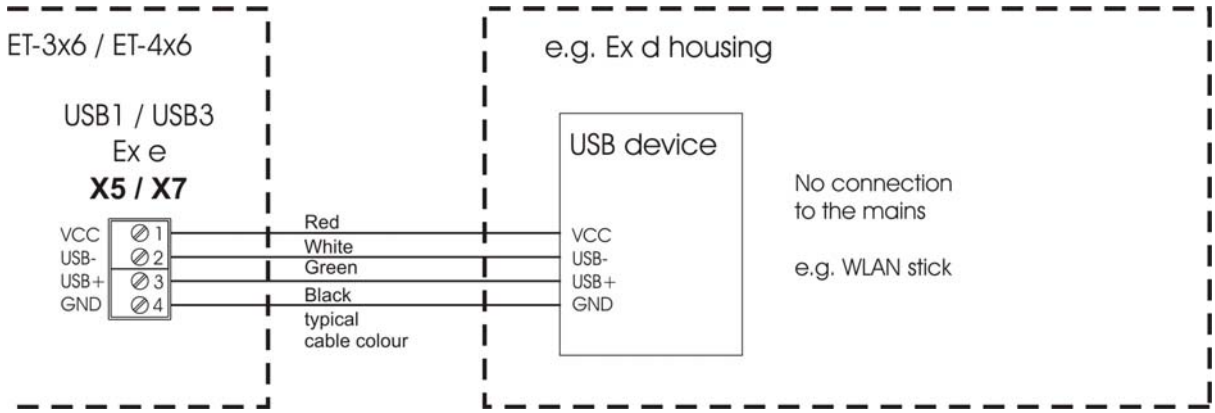

Type 1 connection diagram (e.g. WLAN stick)

2.8.4.2.2.2 Type 2 connection version

- The USB device does require an external power supply to function because it uses over 500 mA (e.g. hard disks, CD/DVD drives).
- The USB device is connected to the mains via other interfaces (e.g. USB/serial converter, USB-Profibus interface).

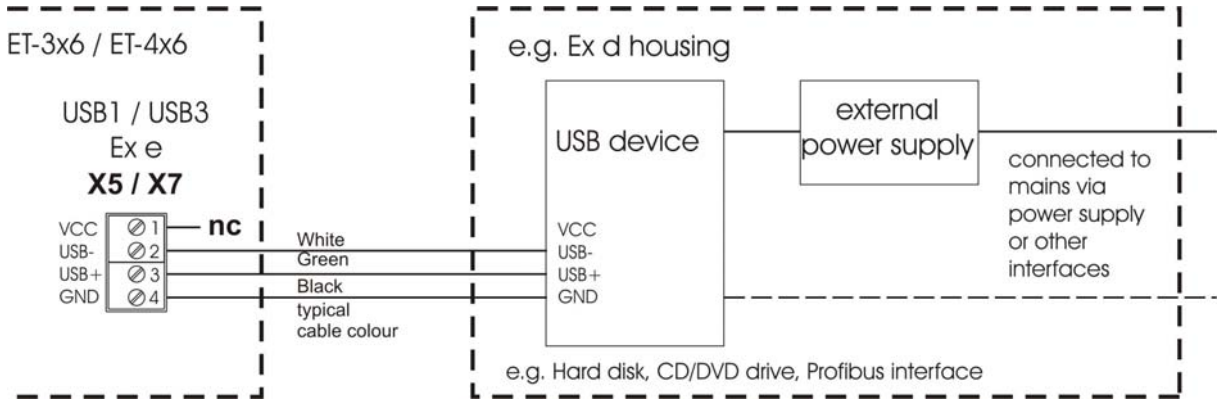

Type 2 connection diagram (e.g. hard disk, CD/DVD with power supply)

3 Installation

3.1 General information

Electrical installations are subject to the relevant regulations for installation and operation, such as RL 1999/92/EC, RL 94/9EC, ElexV, IEC/EN 60079-14 and VDE 0100.

The operators of electrical installations in hazardous environments must ensure that the equipment is kept in proper condition, is operated according to instructions and that maintenance and repairs are carried out (ElexV and EN 60079-14).

3.2 ET-406, ET-416, ET-436

- The operator interfaces may be installed in zones 1, 2, 21 or 22. The intrinsically safe circuits must be installed according to applicable regulations.
- Intrinsically safe and non intrinsically safe conducting connection parts must be installed with a minimum distance of 50 mm.
- The operator interfaces are constructed according to protection type IP65 and must therefore be protected from adverse environmental conditions such as splashed water or dirt exceeding pollution degree 2.
- If the operator interfaces are installed inside a STAHL field housing, the front has IP66. The complete system is therefore tested and certified according to IP66.
- Operators must ensure compliance with the EC type examination certificates before installation. Users must adhere to any “special conditions” therein. Also of importance are the maximum electrical operating values specified therein.
- When connecting the operator interfaces to the intrinsically safe circuits of the associated equipment the respective maximum values of the field unit and the associated equipment must be observed to ensure explosion protection (proof of intrinsic safety).
- The earth/ground (PA) connector at the back of the operator interface housing must be connected to the equipotential bonding conductor of the hazardous area. To prevent equalizing currents flowing to the earth/ground (PA) system of the operator interface it is necessary to safely isolate any connected devices from earth or to integrate them into the earth/ground (PA) system of the operator interface.
- The PA connection part of the operator interface, located at the back of the housing, is internally connected to the GND supply cable (X1, pins 3 and 4).
- Ex-e terminal blocks may be mounted inside the connection box of the housing. They can, for example, serve as a sub-distribution unit for supply and signal lines of accessories mounted in separate housings and connected to the Exicom device's interfaces. These terminal blocks are installed during production of the operator interface. Customers must not attempt to mount the blocks into the devices themselves.

4 Application

The operator interfaces may only be used for the purposes detailed above and in accordance with current regulations (see "Function"). Otherwise, the manufacturer's warranty shall become null and void !

In case of incorrect or unauthorised use or non-compliance with the instructions in this manual the manufacturer's warranty will become null and void.

No changes may be made to the operator interfaces or their components that compromise explosion protection.

The operator interfaces may only be installed and operated in an undamaged, dry and clean condition.

5 Assembly and disassembly

5.1 General information

Assembly and disassembly are subject to general technical rules. Additional, specific safety regulations apply to electronic and pneumatic installations. In Germany, for example, these include the BGI 547 (Information on and principles of workplace safety and health issued by the Government Safety Association).

5.2 Cut-out ET-4x6

Make a cut-out with the following dimensions:

Operator interface	Width	Height	Depth of cut-out	Material thickness
ET-406	385.5 ± 0.5 mm	257.5 ± 0.5 mm	150 mm	up to 8 mm
ET-416	359.5 ± 0.5 mm	257.5 ± 0.5 mm	150 mm	up to 8 mm
ET-436	427.5 ± 0.5 mm	327.5 ± 0.5 mm	165 mm	up to 8 mm

6 Operation

6.1 General information

When operating the devices, particular care shall be taken that:

- the operator interface has been properly installed according to instructions,
- the device is undamaged,
- the terminal compartment is clean,
- all screws are tightened fast,
- the screws on the cable inlets are tightened fast,
- before switching the operator interface on, its external bonding terminal is properly connected to the exponential bonding system at its place of use,
- The cover of the terminal compartment is completely closed.

6.2 Connections ET-4x6

Terminal	Pin	Definition	Connection
X1	1	Power supply operator interface +24 VDC	Power supply of the operator interface
	2	Power supply operator interface +24 VDC	
	3	Power supply operator interface GND	
	4	Power supply operator interface GND	
X2	1	TxD-b	Serial COM1 interface RS-422/485
	2	TxD-a	
	3	RxD-b	
	4	RxD-a	
	5	TxD-b'	
	6	TxD-a'	
	7	RxD-b'	
	8	RxD-a'	
	9	TxD	Serial COM1 interface RS-232
	10	RxD	
	11	RTS/	
	12	CTS/	
	13	GND	
X3	1	TxD-b	Serial COM2 interface RS-422/485
	2	TxD-a	
	3	RxD-b	
	4	RxD-a	
	5	TxD-b'	
	6	TxD-a'	
	7	RxD-b'	
	8	RxD-a'	
	9	TxD	Serial COM2 interface RS-232
	10	RxD	
	11	RTS/	
	12	CTS/	
	13	GND	
X4		USB interface, connection type A	USB0 Ex-i
X5	1	VCC	USB1 Ex-e
	2	USB -	
	3	USB +	
	4	GND	
X6	1	VCC	USB2 Ex-i
	2	USB -	
	3	USB +	
	4	GND	
X7	1	VCC	USB3 Ex-e
	2	USB -	
	3	USB +	
	4	GND	

X8	0	+U_INT1	Reader interface I.S.
	1	+U_EX1	
	2	0V	
	3	GND	
	4	+U_RD	
	5	Signal 1	
	6	Signal 2	
	7	Signal 3	
	8	Signal 4	
	9	+U_EX1 (out)	
X9	1	VCC	External keyboard I.S. *
	2	DAT	
	3	CLK	
	4	GND	
X10	1	Optical fiber connection type SC	Ethernet optical fiber interface

Please also note that the COM interfaces may only be physically connected once !
The interconnection is either with a physical RS-232 or an RS-422/485 connection.

☞ * Do **NOT** connect the optional external keyboard to live equipment !

6.2.1 Dip switch settings S3 and S4

Switch	Position	Interface	Function
S3-1	OFF	COM1 RS-422/485	No bus terminator resistor set
	ON		Bus terminator resistor TxD line
S3-2	OFF		No bus terminator resistor set
	ON		Bus terminator resistor RxD line
S4-1	OFF	COM2 RS-422/485	No bus terminator resistor set
	ON		Bus terminator resistor TxD line
S4-2	OFF		No bus terminator resistor set
	ON		Bus terminator resistor RxD line

 © R. STAHL HMI Systems GmbH / OperatingInstruction_Exicom_OpenHMI_en_V_1_6_E.doc / 14.11.2007

6.3 Connections Ex-e terminals (X12)

Ex-e terminal blocks may be mounted inside the connection box of the housing. Because these terminal blocks are exclusively mounted during production, this option must be specified when ordering the product.

For devices with these optional terminal blocks, please note the following:

- Only Ex-e circuits may be connected to these terminal blocks !
- An interconnection of Ex-e and other circuits is not permitted !

☞ When connecting cables please ensure that the cable isolation goes right up to the terminal part.

6.3.1 Connection details of the Ex-e terminals

- Maximum nominal voltage: 275 V
- Maximum nominal voltage:
  (if the fixed bridge bar is used): 175 V
- Rated current: 4 A
- Maximum rated current: 5 A

6.3.2 Cable types and cross sections

Copper cables with the following cross sections may be used:

- Maximum cable cross section in mm² (AWG) 4 (12)
- Minimum cable cross section in mm² (AWG) 0.2 (24)

Multiple cable connection to the screw terminal (2 cables of the same cross section and cable type):

- flexible mm² (AWG) 0.2 – 1.5 (24 – 16)
- rigid mm² (AWG) 0.2 – 1.5 (24 – 16)

Which cable cross sections are chosen should be decided on the basis of relevant regulations, such as DIN VDE 0298. Factors that might require a larger cross section, such as current, increased temperatures, cable bundling, etc. must also be taken into account.

7 Maintenance, service

Associated equipment is subject to maintenance, service and testing according to guidelines 1999/92/EC, IEC 60079-19 and EN 60079-17 !

Because the transmission of the devices remains reliable and stable over long periods of time, regular adjustments are not required.

- Only original parts provided by the manufacturer must be used.
- Fuses may only be replaced by equivalent fuse types.

System maintenance should focus on the following:

a. Seal wear
b. Screen damage
c. All screws are tightened fast
d. All cables and lines are properly connected and undamaged

7.1.1 Servicing

In accordance with IEC 60079-19 and EN 60079-17, operators of electric plants in hazardous areas are obliged to have them serviced by qualified electricians.

8 Troubleshooting

Devices operated in hazardous areas must not be modified. Repairs may only be carried out by qualified, authorized staff specially trained for this purpose.

☞ Repairs may only be carried out by specially trained staff who are familiar with all basic conditions of the applicable user regulations and – if necessary – have been authorized by the manufacturer.

 © R. STAHL HMI Systems GmbH / OperatingInstruction_Exicom_OpenHMI_en_V_1_6_E.doc / 14.11.2007

9 Disposal

Disposal of packaging and used parts is subject to regulations valid in whichever country the device has been installed.
The disposal of devices sold after August 13th, 2005, and installed in countries under the jurisdiction of the EU is governed by directive 2002/96/EC on waste electrical and electronic equipment (WEEE). Under this directive, operator interfaces are listed in category 9 (monitoring and control instruments).
We shall take back our devices according to our General Terms and Conditions.

9.1.1 ROHS directive 2002/95/EC

The prohibition of hazardous substances as detailed in directive 2002/95/EC (ROHS) does not apply to electronic equipment of categories 8 and 9, and is therefore not applicable to the equipment described in these operating instructions.

9.1.2 China ROHS labeling

According to new Chinese legislation in force since 01.03.2007, all devices containing hazardous substances must be labeled accordingly.

For our operator interfaces, the following conditions apply:

Names and contents of toxic or hazardous substances or elements:

Part	**Toxic or hazardous substances and elements**					
Name	**Lead (Pb)**	**Mercury (Hg)**	**Cadmium (Cd)**	**Hexa-valent Chromium (Cr (VI))**	**Poly-brominated Biphenyls (PBB)**	**Poly-brominated Diphenyl ethers (PBDE)**
Housing	O	O	O	O	O	O
Display	O	O	O	O	O	O
all PCBs	**X**	O	O	O	O	O
Miscellaneous	O	O	O	O	O	O

O Indicates that this toxic or hazardous substance contained in all of the homogeneous materials for this part is below the limit requirements in SJ/T11363-2006.

X Indicates that this toxic or hazardous substance contained in at least one of the homogeneous materials for this part is below the limit requirements in SJ/T11363-2006.

10 Accessories

10.1 Phoenix Contact terminal block

10.1.1 Data sheet Mini-Ex-terminal

☞ Please note that when connected to the operator interfaces the connection values for the explosion proof terminals are limited (see also Chapter 6.3.1 ff !

PHOENIX CONTACT
INSPIRING INNOVATIONS

Mini-Terminal Block MBK

Article description	MBK 3/E-Z *
Article no.	1413036 *
EC-TYPE EXAMINATION CERTIFICATE	**KEMA 01ATEX2134U** *
Marking	Ex e II KEMA 01ATEX2134U
Assembly on mounting rails	NS 15 acc. to EN 60715-TH 15
Stripping length	8 mm
Torque	0,6 - 0,8 Nm
Assembly instructions	See page 2
Operating temperature range	-50 °C ... +110 °C

KEMA

Technical data according to EN 60079-7 (increased safety „e“)

Rated insulation voltage Rated voltage	250 V 275 V	
Nominal current	22,5 A	
Max. rated current	28 A	
Connection capacity		
Rated cross-section	2,5 mm²	AWG 14
Max. conductor cross-section	4 mm²	AWG 12
Connectable conductor cross-section	0,2 - 4 mm² rigid 0,2 - 2,5 mm² flexible	AWG 24 - 12 AWG 24 - 14

Multi-conductor connection (2 conductors of the same cross-section)

rigid / flexible	0,2 - 4 mm² rigid 0,2 - 2,5 mm² flexible	AWG 24 - 12 AWG 24 - 14

Data of insulation material

Description	PA 6.6
Creep resistance acc. to IEC 60112 / material group	CTI 600 / I

Accessories	**Description**	**Article no.**	
Cover	D-MBK/E	1415021	
Fixed bridge bar	FBRI 10-5 N	2770642	22,0 A / 2,5 mm² 22,5 A / 4 mm²

* valid for colour variants

2006.03.29
Rev. 00
Technical modifications reserved

Phoenix Contact GmbH & Co. KG
Flachsmarktstraße 8
32825 Blomberg

Page 1 of 2

 © R. STAHL HMI Systems GmbH / OperatingInstruction_Exicom_OpenHMI_en_V_1_6_E.doc / 14.11.2007

Important assembly instructions – increased safety „e“

When assembling with other certified series and sizes of Terminal Blocks and using belonging accessories, the required creepage distances and clearances have to be observed.

When using the fixed bridge bars to achieve a skipped bridging the rated voltage is reduced to 176 V.

The Terminal Blocks and their belonging accessories have to be assembled as specified below.

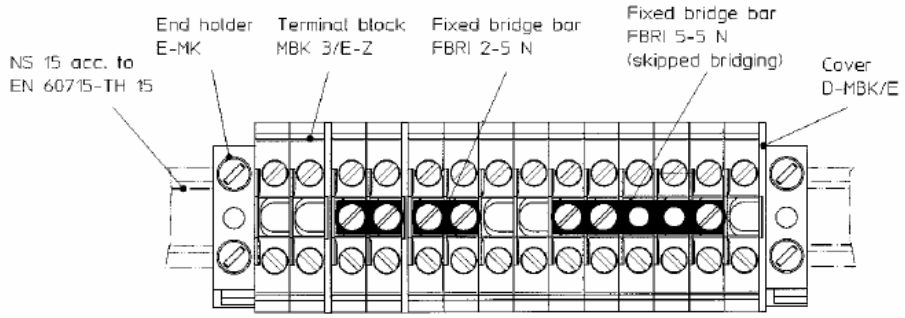

Operational instructions – Intrinsic safety “i“

EN 60079-14 Clause 12 describes modular terminal blocks as simple apparatus when used in intrinsically-safe circuits. Testing by a notified body and marking is not required. If terminal blocks be identifiable as part of an intrinsically circuit are marked by a colour, the colour used shall be light blue.

Testing for compliance to intrinsically safe requirements including clearance, creepage, and solid insulation distances specified in EN 60079-0 (EN 50014) and EN 60079-11 (EN 50020) have been performed for circuits up to **60 V**.

Compliance with distance requirements of EN 60079-14 Clause 12.2.3 for the connection of separated intrinsically-safe circuit accessories is met. A minimum distance of 50 mm to separate clamping units of intrinsically-safe and non intrinsically-safe circuits is required through the use of a separating plate or similar device.

Phoenix Contact GmbH & Co. KG
Flachsmarktstraße 8
32825 Blomberg
Germany

+49 – (0) 52 35 – 3-00
+49 – (0) 52 35 – 3-4 12 00
www.phoenixcontact.com

11 Certificates

11.1 Exicom ET-406, ET-416, ET-436

11.1.1 Declaration of EC conformity

EG - Konformitätserklärung
EC-Declaration of Conformity
CE-Déclaration de Conformité

STAHL

Wir/ *We* /Nous

R. STAHL HMI Systems GmbH
Im Gewerbegebiet Pesch 14
D-50767 Köln

erklären in alleiniger Verantwortung dass unser Produkt
declare under our sole responsibility that the product
attestons sous notre responsabilité que le produit

Exicom ET - 306 , ET - 316 , ET - 336 , ET – 406 , ET – 416 , ET - 436

auf welches sich diese Erkärung bezieht, mit der /den folgenden Norm(en) oder normativen Dokumenten übereinstimmt
which is the subject of this declaration, is in conformity with the following standard(s) or normative documents
auquel cette déclaration se rapporte, est conforme aux norme(s) ou aux documents normatifs suivants

Bestimmung der Richtlinie *Terms of the directive* *Prescription de la directive*	**Titel und/oder Nr. sowie Ausgabedatum der Norm** *Titel and/or No. and date of issue of the standard* *Titre et/ou No. Ainsi que date démission des normes*
94/9/EG : Geräte und Schutzsysteme zur bestimmungsgemäßen Verwendung in explositionsgefährdeten Bereichen *94/9/EC: Equipment and potective systems intended for use in potentially explosive atmospheres* *94/9/CE: Appareils et systémes de protection destinés á êtré utilisés en atmosphères explosibles*	EN 60079-0 (2004) EN 60079-1 (2004) EN 60079-7 (2003) EN 60079-18 (2004) prEN 60079-28 (2005) EN 50020 (2002) prEN 61241-0 (2004) EN 61241-1 (2004)
98/336/EWG : **Elektromagnetische Verträglichkeit** *98/336/EEC: Elektromagnetic compatibility* *98/336/CEE: Compatibilité electromagnétique*	EN 61000-6-2 (2002) EN 61000-6-4 (2002)
EG-Baumusterprüfbescheinigung: *EC-Type Examination Certificate* *Attestation d´examen CE de type*	TÜV 05 ATEX 7176 X

Köln, den 04.11.2005
Ort und Datum
Place and date
lieu et date

Joachim Düren
Technical Director

Werner Bertges
Quality Manager

© R.STAHL Systems GmbH exicom et-3xx_et-4xx_konf.doc

11.1.2 EC type examination certificate

TÜV CERT

TÜV

TÜV Rheinland Group

(1) **EC-TYPE-EXAMINATION CERTIFICATE**

(2) Equipment and Protective Systems intended for Use in Potentially Explosive Atmosphere - Directive 94/9/EC

(3) EC-Type-Examination Certificate Number

TUV 05 ATEX 7176 X

(4) **Equipment:** **EXICOM ET-306; ET-316; ET-336; ET-406; ET-416; ET-436**

(5) **Manufacturer:** **R. STAHL HMI Systems GmbH**

(6) **Address:** **Im Gewerbegebiet Pesch 14**
D - 50767 Köln

(7) This equipment and any acceptable variation thereto are specified in the schedule to this certificate and the documents referred to.

(8) The TÜV CERT-Zertifizierungsstelle for ex-protected products of TÜV Industrie Service GmbH, TÜV Rheinland Group, Notified Body No. 0035 in accordance with Article 9 of the Council Directive 94/9/EC of 23 March 1994, certifies this equipment has been found to comply with the Essential Health and Safety Requirements relating to the design and construction of equipment and protective systems intended for use in potentially eyplosive atmosphere, given in Annex II to the Directive.

The examination and test results are recorded in the confidential report 194/Ex 176.00 / 05

(9) Compliance with the Essential Health and Safety Requirements has been assured by compliance with

EN 60079-0: 2004 **EN 60079-1: 2004** **EN 60079-7: 2003**
EN 60079-18: 2004 **EN 50020:2002** **prEN 60079-28: 2005**
prEN 61241-0: 2004 **EN 61241-1: 2004**

(10) If the sign "X" is placed after the certificate number, it indicates that the equipment is subject to special conditions for safe use specified in the schedule to this certificate.

(11) This EC-type-examination Certificate relates only to the design and construction of the specified equipment in accordance with Directive 94/9/EC. Further requirements of this Directive apply to the manufacture and supply of this equipment.

(12) The marking of the equipment shall include the following:

Ex II 2 (2) G	Ex d e mb ib [ib] [op is] IIC T4
II 2 D	Ex tD A21 IP65 T90°C

TÜV CERT-Zertifizierungsstelle für Explosionsschutz Cologne, 2005-10-25

Dipl.-Ing. Heinz Farke

0035

EC-type-examination Certificates without signation and stamp shall not be valid.
This EC-Type-Examination Certificate may only be reproduced in its entirety and without change.
Extracts or alternations are subject to the
TÜV Cert-Zertifizierungsstelle für Ex-Schutz-Produkte
TÜV Industrie Service GmbH TÜV Rheinland Group Am Grauen Stein 51105 Köln
Tel. +49 (0) 221 806-0 Fax. + 49 (0) 221 806 114

TÜV CERT TÜV TÜV Rheinland Group

1st Supplement

in accordance with directive 94/9/EC Appendix III, No. 6

to EU Type Test Certificate TÜV 05 ATEX 7176 X

Devices: **EXICOM ET -306; -316; -336; -406; -416; -436**

Manufacturer: **R. Stahl HMI Systems GmbH**

Address: **Im Gewerbegebiet Pesch 14**

D- 50 767 Cologne

Description of Supplements and Amendments:

The original versions of the EXICOM ET -306; -316; -336; -406; -416; -436 devices were expanded by the following:

- Additional Ex-e terminals (X12) in the terminal box for the distribution of external accessories connected to the interfaces of the operator terminal.
- Expansion of the number of approved cable gland types and dimensions.
- Expansion of the device description in respect to the possibility of connecting equipment to interfaces USB 1 and USB 3 with an external power supply, protected with an external fuse having a switching capacity of >1.5kA.
- Reduction of the admissible ambient temperature range depending on the clock rates of the CPU and the resulting higher internal heating.
- The tables for the external intrinsically safe circuits have been adjusted and completely replace the corresponding tables in the original certificate.

This EU Type Test Certificate may only be circulated without alterations.
Extracts or alterations must be approved by TÜV CERT-Zertifizierungsstelle of TÜV Industrie Service GmbH, TÜV Rheinland Group

TÜV Rheinland Group

Technical Data

Only the data related to the 1st Supplement are provided, all other data remain unchanged in relation to the original certificate.

Ambient Temperature Range:

-10°C to +40°C
or -10°C to +50°C
or -10°C to +60°C

The appropriate specifications are provided on the device and they depend on the clock rate of the internal CPU.

Electrical Specifications:

External non-intrinsically safe circuits:

All parameters of the external non-intrinsically safe circuits in the original certificate remain unchanged and are expanded by the terminals on terminal strip X12.

Ex-e terminals for accessories (X12):

Max. rated voltage without cross-connectors jumping over	275 V
Max. rated voltage with cross-connectors jumping over	175 V
Rated current	4 A
Max. load current	5 A

Connectable copper conductor cross sections:

- Max. cross section in mm² (AWG) 4 (12)
- Min. cross section in mm² (AWG) 0.2 (24)

Multiwire cable connected to the screw terminal (2 conductor of the same cross section and same type)
- Flexible mm² (AWG) 0.2 – 1.5 (24 – 16)
- Rigid mm² (AWG) 0.2 – 1.5 (24 – 16)

The conductor cross section must be selected according to defined standards such as DIN VDE 0298. Current load, excessive temperatures, bundling of cables, etc. must be taken into consideration. Any resulting reduction factors must be taken into consideration.

This EU Type Test Certificate may only be circulated without alterations.
Extracts or alterations must be approved by TÜV CERT-Zertifizierungsstelle of TÜV Industrie Service GmbH, TÜV Rheinland Group

TÜV Rheinland Group

External intrinsically safe circuits:

Note: It is allowed to connect the capacities and inductances specified in the tables simultaneously.

The following corrected tables replace the existing tables in Section 4.5.2 of the EC Type Test TÜV 05 ATEX 7176 X dated 25 October 2005:

USB-0 (X4)

The maximum safe limits for group IIC are:

U_i	=	-	V		U_o	=	5.9	V		
I_i	=	-	mA		I_o	=	1.02	A		
P_i	=	-	mW		P_o	=	6.02	W		
C_i	=	0	µF		C_o	=	8	13	30	43	µF
L_i	=	0	mH		L_o	=	10	5	2	1	µH

The maximum safe limits for group IIB are:

U_i	=	-	V		U_o	=	5.9	V		
I_i	=	-	mA		I_o	=	1.02	A		
P_i	=	-	mW		P_o	=	6.02	W		
C_i	=	0	µF		C_o	=	14	26	50	89	µF
L_i	=	0	mH		L_o	=	0.1	0.05	0.02	0.01	mH

USB-2 (X6)

The maximum safe limits for group IIC are:

U_i	=	-	V		U_o	=	5.9	V		
I_i	=	-	mA		I_o	=	1.02	A		
P_i	=	-	mW		P_o	=	6.02	W		
C_i	=	0	µF		C_o	=	8	13	30	43	µF
L_i	=	0	mH		L_o	=	10	5	2	1	µH

The maximum safe limits for group IIB are:

U_i	=	-	V		U_o	=	5.9	V		
I_i	=	-	mA		I_o	=	1.02	A		
P_i	=	-	mW		P_o	=	6.02	W		
C_i	=	0	µF		C_o	=	14	26	50	89	µF
L_i	=	0	mH		L_o	=	0.1	0.05	0.02	0.01	mH

This EU Type Test Certificate may only be circulated without alterations.
Extracts or alterations must be approved by TÜV CERT-Zertifizierungsstelle of TÜV Industrie Service GmbH, TÜV Rheinland Group

TÜV Rheinland Group

Reader (X8)

+Uint-1 (power supply circuit, X8.0)

The maximum safe limits for group IIC are:

U_i	=	-	V		U_o	=	10.4	V
I_i	=	-	mA		I_o	=	220	mA
P_i	=	-	mW		P_o	=	2.29	W
C_i	=	-	µF		C_o	=	2.41	µF
L_i	=	-	mH		L_o	=	0.02	mH

The maximum safe limits for group IIB are:

U_i	=	-	V		U_o	=	10.4	V
I_i	=	-	mA		I_o	=	220	mA
P_i	=	-	mW		P_o	=	2.29	W
C_i	=	-	µF		C_o	=	12	µF
L_i	=	-	mH		L_o	=	50	µH

Reader WCR1 (connection for supply voltage, X8.1 – 2)

The maximum safe limits for group IIC are:

U_i	=	12.4	V		U_o	=	-	V
I_i	=	200	mA		I_o	=	-	mA
P_i	=	-	mW		P_o	=	-	mW
C_i	=	0	µF		C_o	=	-	µF
L_i	=	0	mH		L_o	=	-	mH

The maximum safe limits for group IIB are:

U_i	=	12.4	V		U_o	=	-	V
I_i	=	200	mA		I_o	=	-	mA
P_i	=	-	mW		P_o	=	-	mW
C_i	=	0	µF		C_o	=	-	µF
L_i	=	0	mH		L_o	=	-	mH

This EU Type Test Certificate may only be circulated without alterations.
Extracts or alterations must be approved by TÜV CERT-Zertifizierungsstelle of TÜV Industrie Service GmbH, TÜV Rheinland Group

04.04.04

TÜV Rheinland Group

Reader WCR1 (power supply for reader, X8.3 – 4)

The maximum safe limits for group IIC are:

U_i	=	-	V		U_o	=	5.88	V
I_i	=	-	mA		I_o	=	200	mA
P_i	=	-	mW		P_o	=	1.18	W
C_i	=	4.6	µF		C_o	=	28.4	µF
L_i	=	100	nH		L_o	=	1.9	µH

The maximum safe limits for group IIB are:

U_i	=	-	V		U_o	=	5.88	V
I_i	=	-	mA		I_o	=	200	mA
P_i	=	-	mW		P_o	=	1.18	W
C_i	=	4.6	µF		C_o	=	56.4	µF
L_i	=	100	nH		L_o	=	19.9	µH

Reader WCR1 (signal inputs and outputs, X8.5 – 8)

The maximum safe limits for group IIC are:

U_i	=	15	V		U_o	=	5.88	V
I_i	=	500	mA		I_o	=	56	mA
P_i	=	2.5	W		P_o	=	83	mW
C_i	=	0	µF		C_o	=	34	µF
L_i	=	0	mH		L_o	=	2	µH

The maximum safe limits for group IIB are:

U_i	=	15	V		U_o	=	5.88	V
I_i	=	500	mA		I_o	=	56	mA
P_i	=	2.5	W		P_o	=	83	mW
C_i	=	0	µF		C_o	=	63	µF
L_i	=	0	mH		L_o	=	20	µH

This EU Type Test Certificate may only be circulated without alterations.
Extracts or alterations must be approved by TÜV CERT-Zertifizierungsstelle of TÜV Industrie Service GmbH, TÜV Rheinland Group

1504 06.04

 © R. STAHL HMI Systems GmbH / OperatingInstruction_Exicom_OpenHMI_en_V_1_6_E.doc / 14.11.2007

TÜV Rheinland Group

Reader RSi1 (connection for supply voltage, X8.1 – 2)

The maximum safe limits for group IIC are:

U_i	=	12.4	V		U_o	=	-	V
I_i	=	220	mA		I_o	=	-	mA
P_i	=	2.7	W		P_o	=	-	mW
C_i	=	0	µF		C_o	=	-	µF
L_i	=	0	mH		L_o	=	-	mH

The maximum safe limits for group IIB are:

U_i	=	12.4	V		U_o	=	-	V
I_i	=	220	mA		I_o	=	-	mA
P_i	=	2.7	W		P_o	=	-	mW
C_i	=	0	µF		C_o	=	-	µF
L_i	=	0	mH		L_o	=	-	mH

Reader RSi1 (power supply for reader, X8.3 – 4)

The maximum safe limits for group IIC are:

U_i	=	-	V		U_o	=	5.4	V
I_i	=	-	mA		I_o	=	220	mA
P_i	=	-	W		P_o	=	1.19	W
C_i	=	4.2	µF		C_o	=	39.8	µF
L_i	=	100	nH		L_o	=	1.9	µH

The maximum safe limits for group IIB are:

U_i	=	-	V		U_o	=	5.4	V
I_i	=	-	mA		I_o	=	220	mA
P_i	=	-	W		P_o	=	1.19	W
C_i	=	4.2	µF		C_o	=	69.8	µF
L_i	=	100	nH		L_o	=	19.9	µH

This EU Type Test Certificate may only be circulated without alterations.
Extracts or alterations must be approved by TÜV CERT-Zertifizierungsstelle of TÜV Industrie Service GmbH, TÜV Rheinland Group

TÜV Rheinland Group

Reader RSi1 (signal inputs outputs, X8.5 – 8)

The maximum safe limits for group IIC are:

Ui	=	15	V		Uo	=	5.4	V
Ii	=	500	mA		Io	=	49	mA
Pi	=	2.5	W		Po	=	62	mW
Ci	=	0	µF		Co	=	45	µF
Li	=	0	mH		Lo	=	2	µH

The maximum safe limits for group IIB are:

U_i	=	15	V		U_o	=	5.4	V
I_i	=	500	mA		I_o	=	49	mA
P_i	=	2.5	W		P_o	=	62	mW
C_i	=	0	µF		C_o	=	78	µF
L_i	=	0	mH		L_o	=	20	mH

Keyboard (X7)

The maximum safe limits for group IIC are:

U_i	=	-	V		U_o	=	5.9	V	
I_i	=	-	mA		I_o	=	200	mA	
P_i	=	-	mW		P_o	=	1.18	W	
C_i	=	14	µF		C_o	=	19	29	µF
L_i	=	0	mH		L_o	=	2	1	µH

The maximum safe limits for group IIB are:

U_i	=	-	V		U_o	=	5.9	V		
I_i	=	-	mA		I_o	=	200	mA		
P_i	=	-	mW		P_o	=	1.18	W		
C_i	=	14	µF		C_o	=	13	23	46	86	µF
L_i	=	0	mH		L_o	=	100	50	20	10	µH

This EU Type Test Certificate may only be circulated without alterations.
Extracts or alterations must be approved by TÜV CERT-Zertifizierungsstelle of TÜV Industrie Service GmbH, TÜV Rheinland Group

9604 04.04

 © R. STAHL HMI Systems GmbH / OperatingInstruction_Exicom_OpenHMI_en_V_1_6_E.doc / 14.11.2007

TÜV Rheinland Group

Test Report No. : 194 / Ex 176.01 / 06

Requirements/conditions for the reliable use and remarks on use

The original EC Type Test Certificate TÜV 05 ATEX 7176 X must be observed.

TÜV - CERT - Zertifizierungsstelle für Explosionsschutz Cologne, 31 May 2006

Dipl.-Ing. Heinz Farke

ATEX Notified body • TÜV Industrie Service • 0035

This EU Type Test Certificate may only be circulated without alterations.
Extracts or alterations must be approved by TÜV CERT-Zertifizierungsstelle of TÜV Industrie Service GmbH, TÜV Rheinland Group

11.1.3 UL certificate

☞ Comment:
The UL certificate listed here is only valid for the operator interfaces of hardware revision 1 (without the 1. supplement) !

Certificate of Compliance

Certificate Number 2006-12-07 E307676
Report Reference E307676 2006-08-18
Issue Date 2006 December 7

Page 1 of 1

Underwriters Laboratories Inc.®

Issued to: R.STAHL HMI SYSTEMS GMBH
IM GEWERBEGEBIET PESCH 14
COLOGNE, 50767 - GERMANY

This is to certify that representative samples of EXICOM ET-306, ET-316, ET-336, ET-406, ET-416 and ET-436

Have been investigated by Underwriters Laboratories Inc.® in accordance with the Standard(s) indicated on this Certificate.

Standard(s) for Safety: **UL 508, UL 60079-0, UL 60079-1, UL 60079-7, UL 60079-11, UL 60079-18 and ANSI/ISA-12.12.01-2000.**

Additional Information: **Suitable for use in Class I, Zone 1, AEx d e m ib [ib] IIC T4 and Class I, Division 2, Group A, T4 hazardous location when installed in accordance with control drawing No. 2006 33 7000 0.**

Only those products bearing the UL Listing Mark should be considered as being covered by UL's Listing and Follow-Up Service.

The UL Listing Mark generally includes the following elements: the symbol UL in a circle: (UL) with the word "LISTED"; a control number (may be alphanumeric) assigned by UL; and the product category name (product identifier) as indicated in the appropriate UL Directory.

Look for the UL Listing Mark on the product

Issued by:
Eduardo Galera
Underwriters Laboratories Inc.

Reviewed by:
Giovanni H. Borges
Underwriters Laboratories Inc.

11.1.3.1 UL control drawing

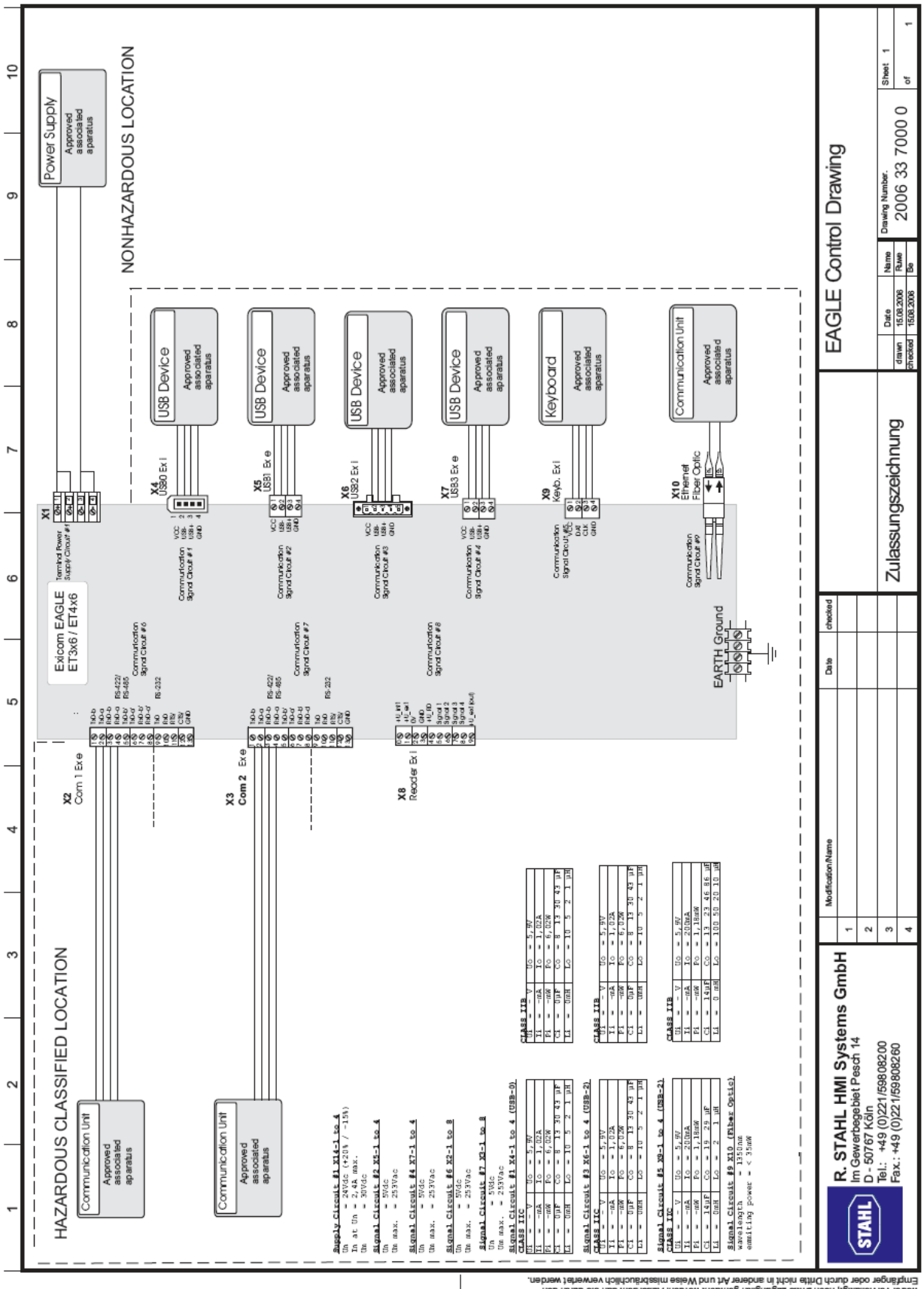

Alle Rechte vorbehalten! Diese Zeichnung darf ohne unsere ausdrückliche Zustimmung weder vervielfältigt, noch Dritte zugänglich gemacht werden. Außerdem darf sie durch den Empfänger oder durch Dritte nicht in anderer Art und Weise mißbräuchlich verwendet werden.

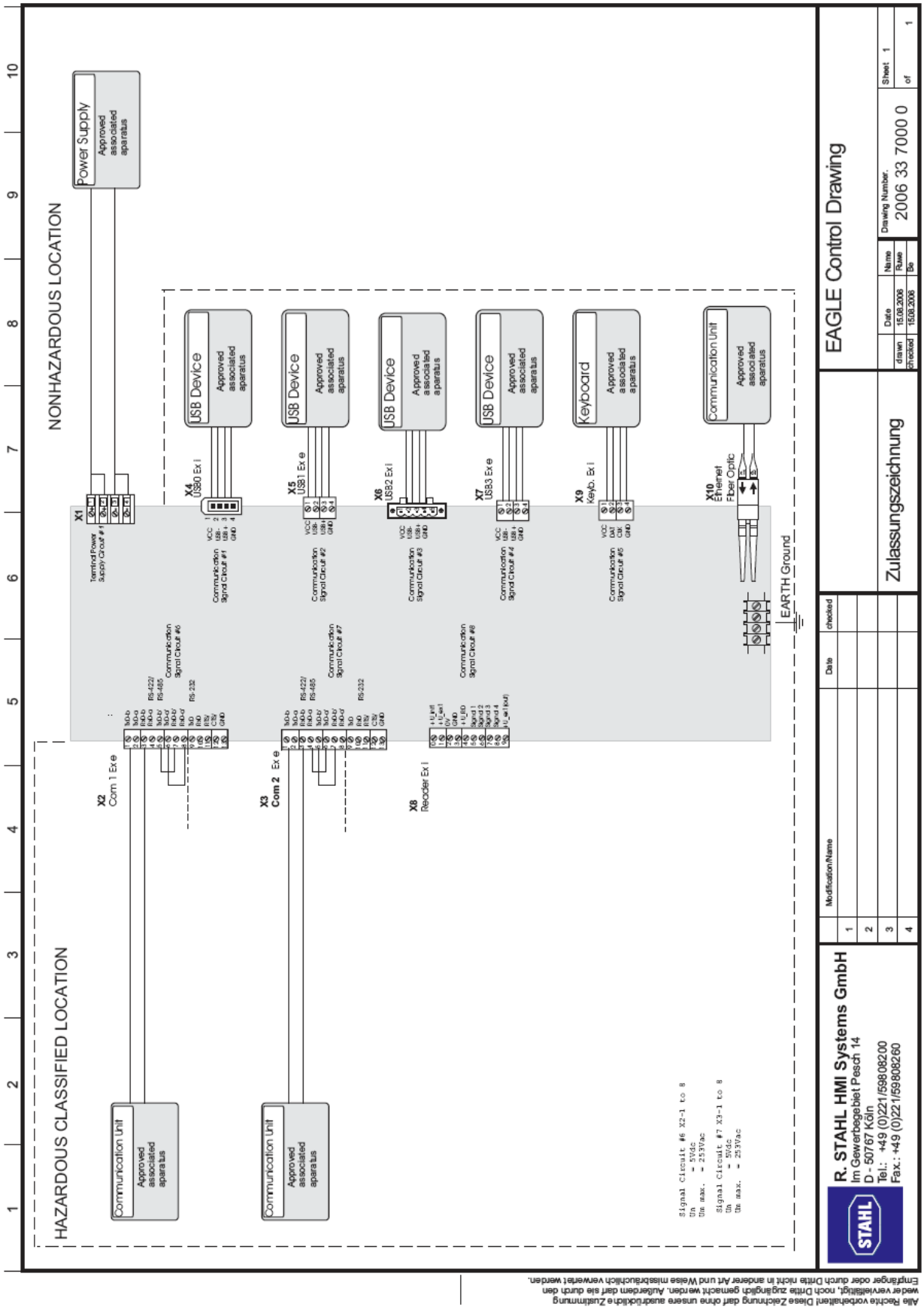

Alle Rechte vorbehalten! Diese Zeichnung darf ohne unsere ausdrückliche Zustimmung weder vervielfältigt, noch Dritte zugänglich gemacht werden. Außerdem darf sie durch den Empfänger oder durch Dritte nicht in anderer Art und Weise mißbräuchlich verwertet werden.

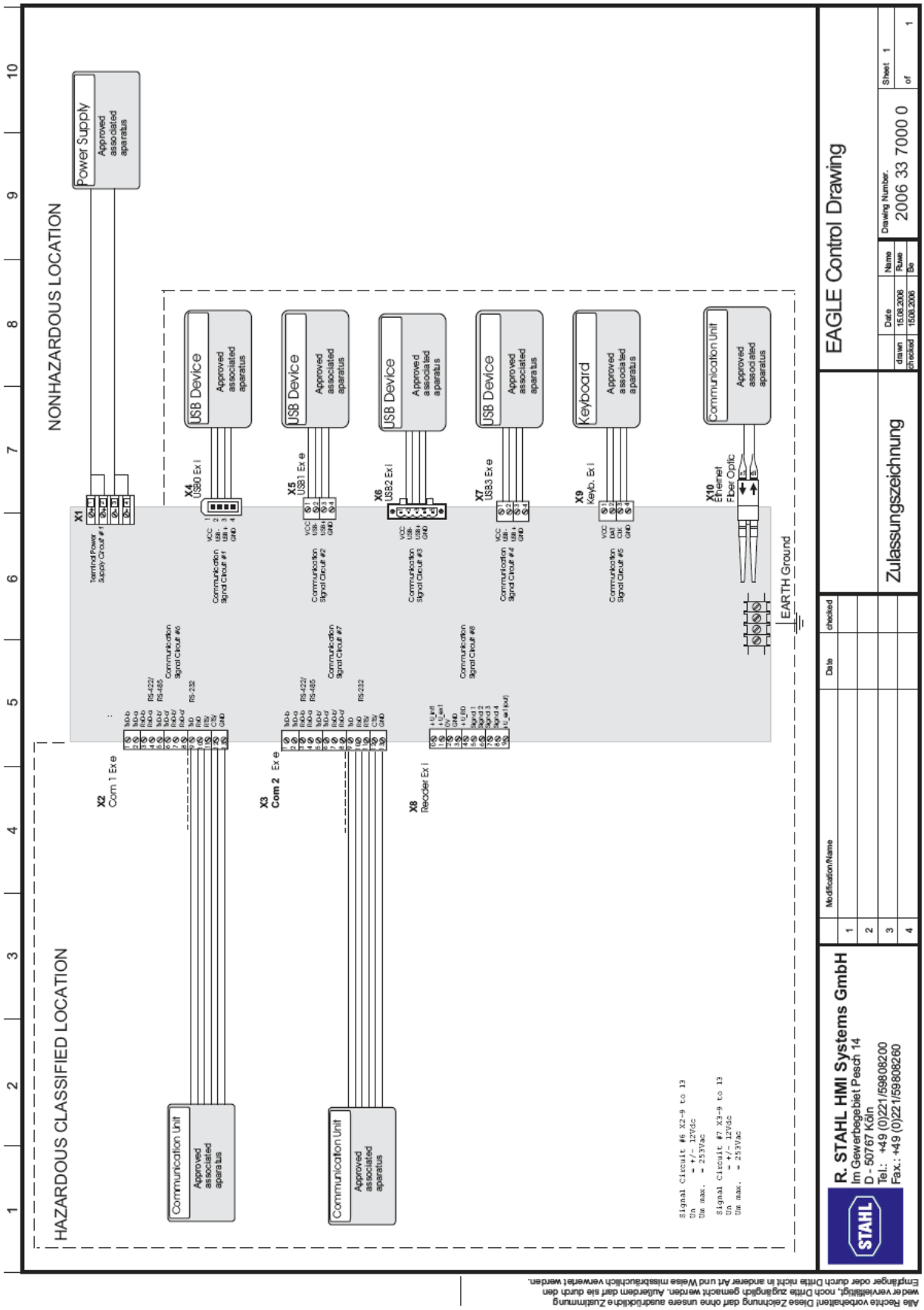

Alle Rechte vorbehalten! Diese Zeichnung darf ohne unsere ausdrückliche Zustimmung weder vervielfältigt, noch Dritte zugänglich gemacht werden. Außerdem darf sie durch den Empfänger oder durch Dritte nicht in anderer Art und Weise mißbräuchlich verwertet werden.

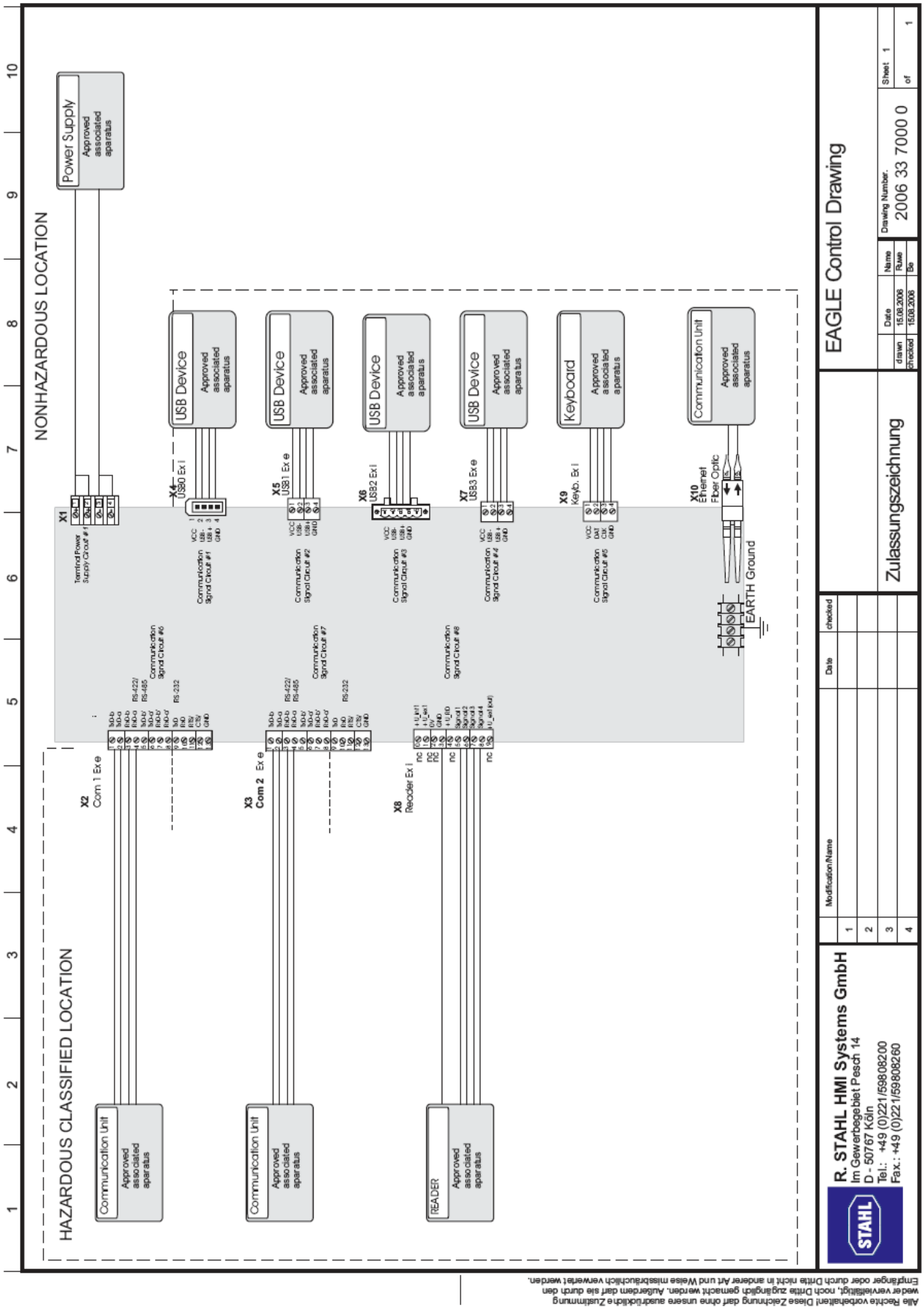
NONHAZARDOUS LOCATION
HAZARDOUS CLASSIFIED LOCATION
Power Supply
Approved associated aparatus
USB Device
Keyboard
Communication Unit
READER
EARTH Ground
EAGLE Control Drawing
Zulassungszeichnung
R. STAHL HMI Systems GmbH
Im Gewerbegebiet Pesch 14
D - 50767 Köln
Tel.: +49 (0)221/59808200
Fax.: +49 (0)221/59808260
Drawing Number: 2006 33 7000 0
Alle Rechte vorbehalten! Diese Zeichnung darf ohne unsere ausdrückliche Zustimmung weder vervielfältigt, noch Dritte zugänglich gemacht werden. Außerdem darf sie durch den Empfänger oder durch Dritte nicht in anderer Art und Weise mißbräuchlich verwertet werden.

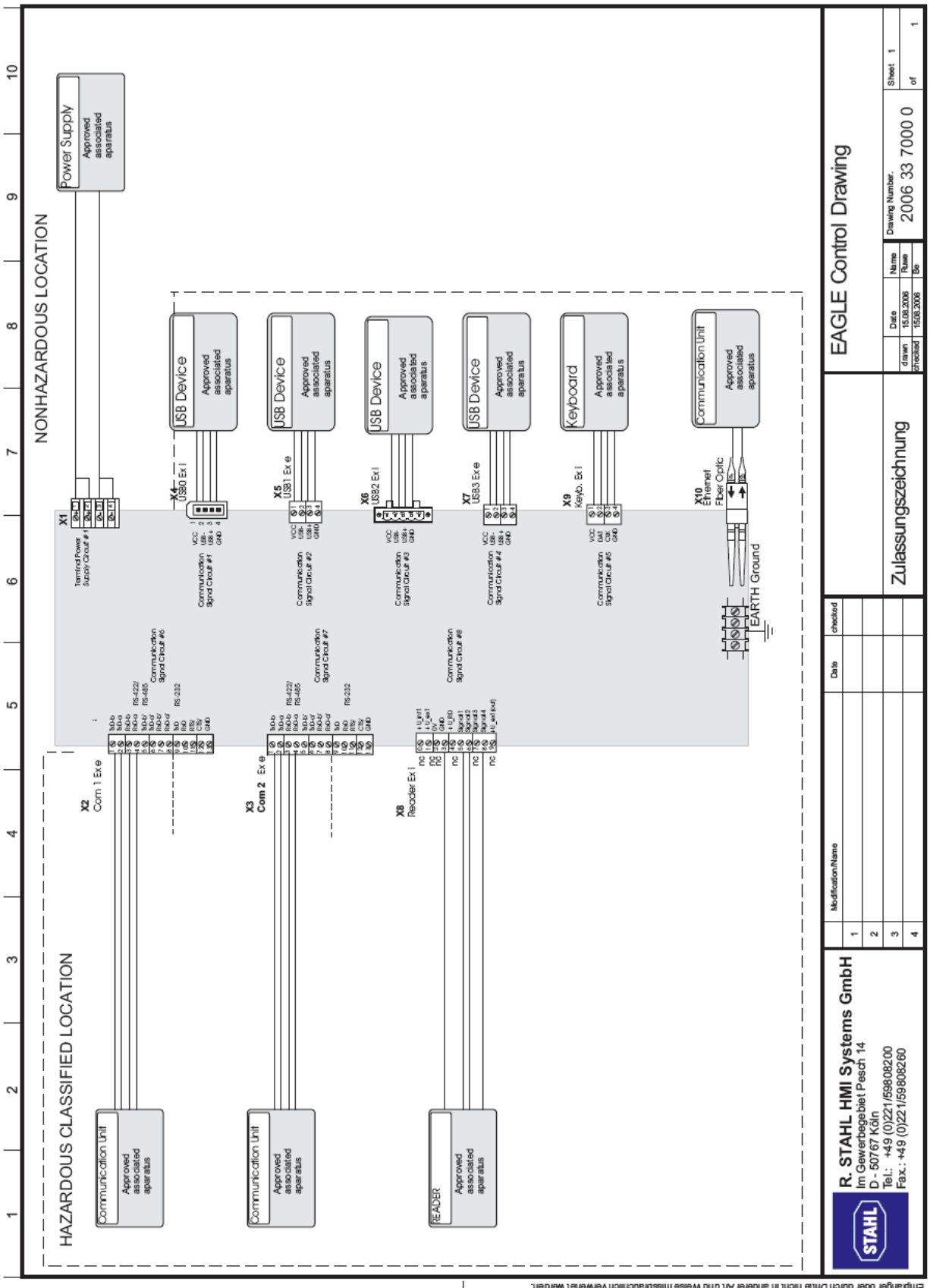

Alle Rechte vorbehalten! Diese Zeichnung darf ohne unsere ausdrückliche Zustimmung weder vervielfältigt, noch Dritte zugänglich gemacht werden. Außerdem darf sie durch den Empfänger oder durch Dritte nicht in anderer Art und Weise mißbräuchlich verwertet werden.

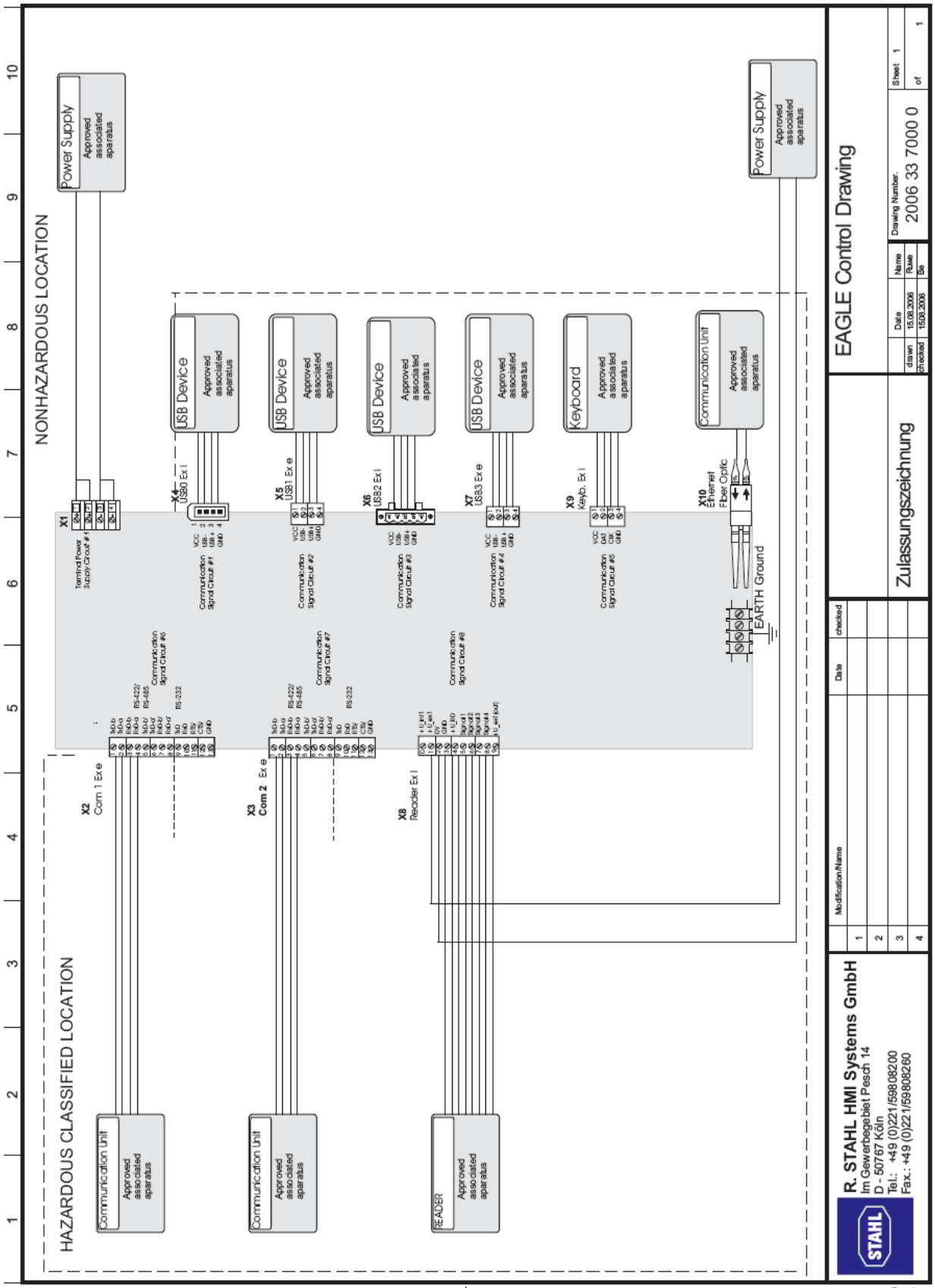

Alle Rechte vorbehalten! Diese Zeichnung darf ohne unsere ausdrückliche Zustimmung weder vervielfältigt, noch Dritte zugänglich gemacht werden. Außerdem darf sie durch den Empfänger oder durch Dritte nicht in anderer Art und Weise mißbräuchlich verwertet werden.

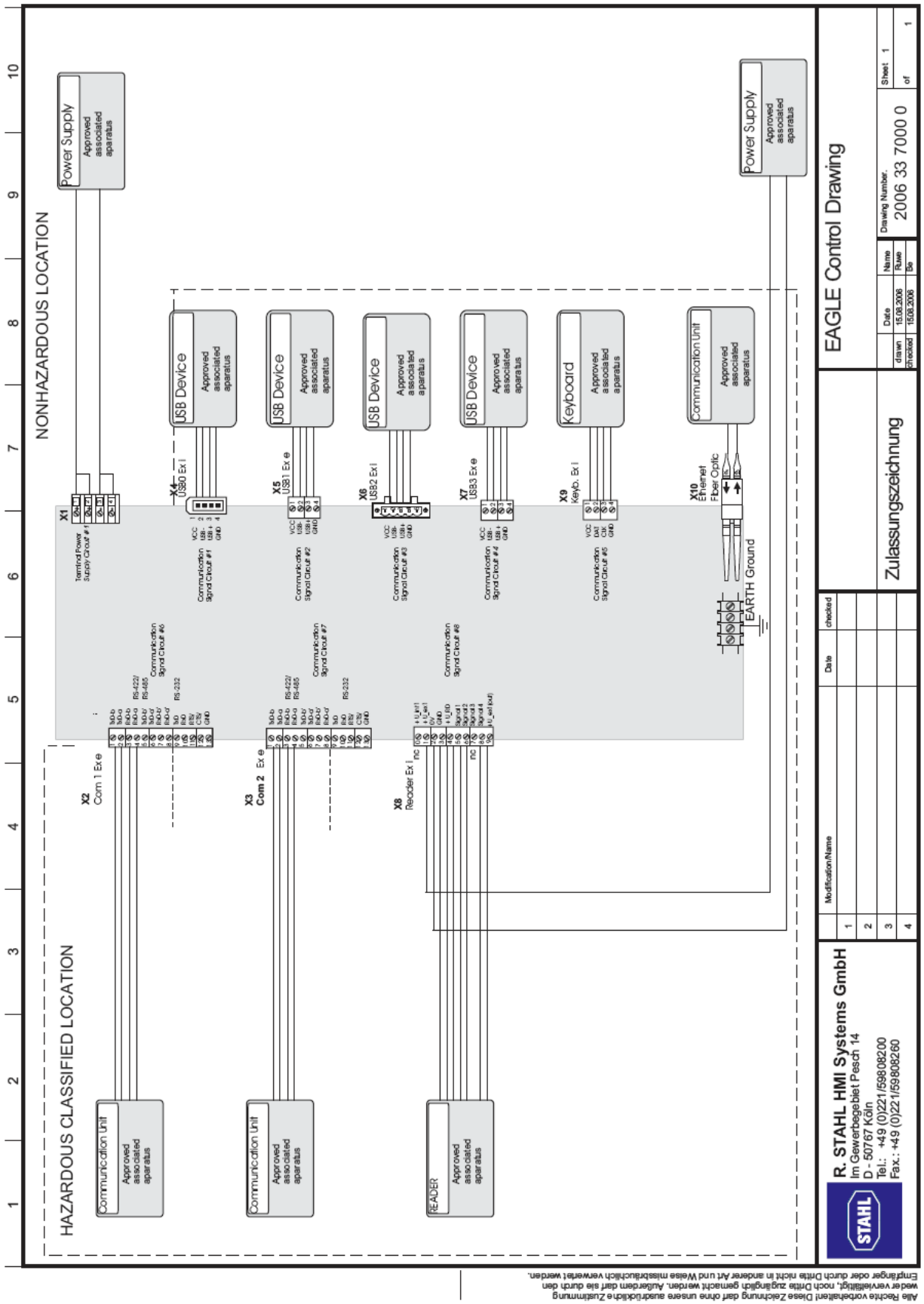
NONHAZARDOUS LOCATION
HAZARDOUS CLASSIFIED LOCATION
Power Supply
Approved associated aparatus
USB Device
Keyboard
Communication Unit
Approved associated aparatus
EARTH Ground
X1
X2
Com 1 Ex e
X3
Com 2 Ex e
X4
USB0 Ex i
X5
USB1 Ex e
X6
USB2 Ex i
X7
USB3 Ex e
X8
Reader Ex i
X9
Keyb. Ex i
X10
Ethernet
Fiber Optic
READER
EAGLE Control Drawing
Zulassungszeichnung
Drawing Number:
2006 33 7000 0
Sheet 1
of 1
R. STAHL HMI Systems GmbH
Im Gewerbegebiet Pesch 14
D - 50767 Köln
Tel.: +49 (0)221/59808200
Fax.: +49 (0)221/59808260
Modification/Name
Date
checked
drawn 15.08.2006
checked 15.08.2006
Name
Ruwe
Be
Alle Rechte vorbehalten! Diese Zeichnung darf ohne unsere ausdrückliche Zustimmung weder vervielfältigt, noch Dritte zugänglich gemacht werden. Außerdem darf sie durch den Empfänger oder durch Dritte nicht in anderer Art und Weise missbräuchlich verwertet werden.

11.1.4 UL do Brasil certificate

☞ Comment:
The UL do Brasil certificate listed here is only valid for the operator interfaces of hardware revision 1 (without the 1. supplement) !

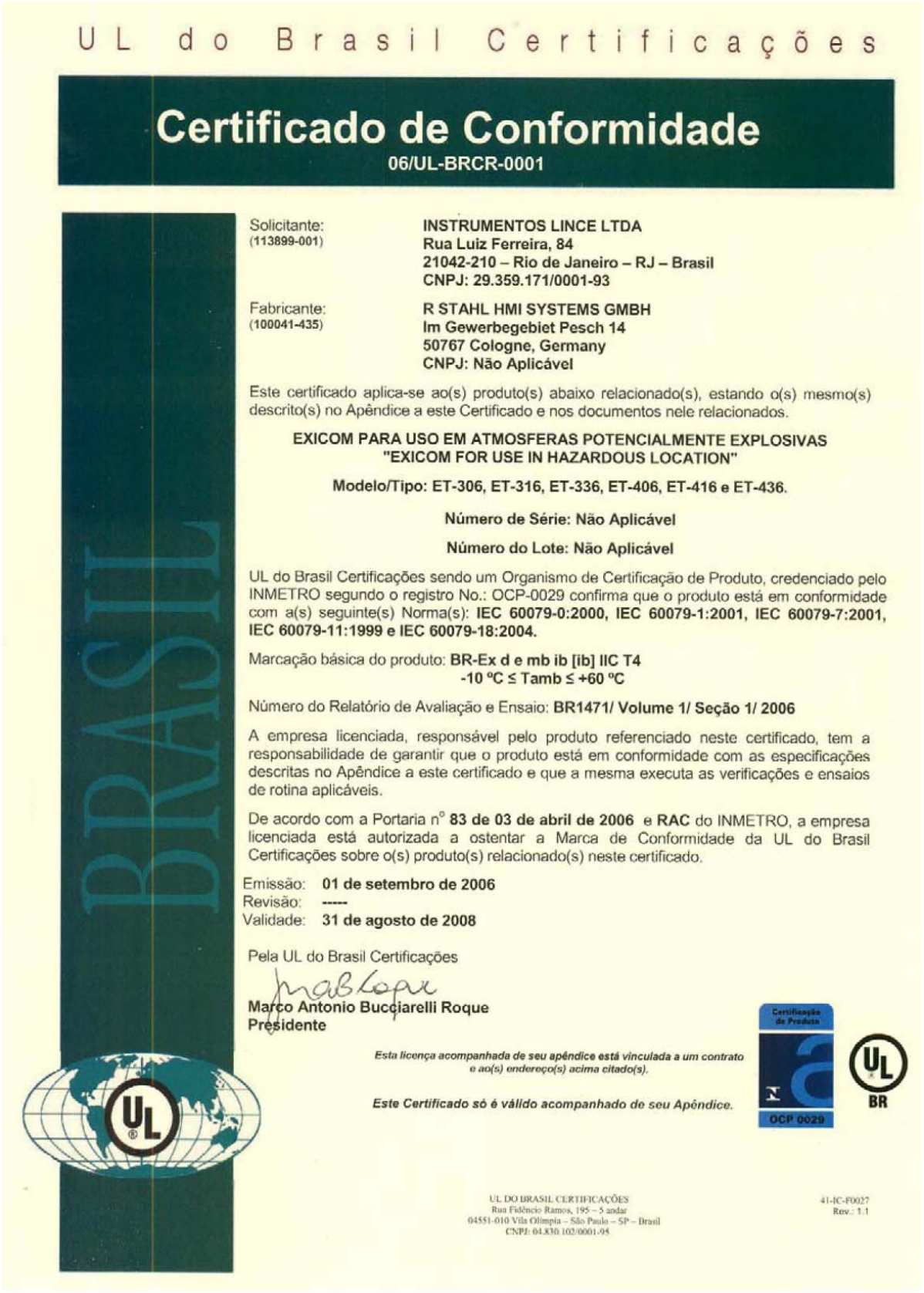

UL do Brasil Certificações

Certificado de Conformidade

06/UL-BRCR-0001

BRASIL

Solicitante: (113899-001)
INSTRUMENTOS LINCE LTDA
Rua Luiz Ferreira, 84
21042-210 – Rio de Janeiro – RJ – Brasil
CNPJ: 29.359.171/0001-93

Fabricante: (100041-435)
R STAHL HMI SYSTEMS GMBH
Im Gewerbegebiet Pesch 14
50767 Cologne, Germany
CNPJ: Não Aplicável

Este certificado aplica-se ao(s) produto(s) abaixo relacionado(s), estando o(s) mesmo(s) descrito(s) no Apêndice a este Certificado e nos documentos nele relacionados.

EXICOM PARA USO EM ATMOSFERAS POTENCIALMENTE EXPLOSIVAS
"EXICOM FOR USE IN HAZARDOUS LOCATION"

Modelo/Tipo: ET-306, ET-316, ET-336, ET-406, ET-416 e ET-436.

Número de Série: Não Aplicável

Número do Lote: Não Aplicável

UL do Brasil Certificações sendo um Organismo de Certificação de Produto, credenciado pelo INMETRO segundo o registro No.: OCP-0029 confirma que o produto está em conformidade com a(s) seguinte(s) Norma(s): **IEC 60079-0:2000, IEC 60079-1:2001, IEC 60079-7:2001, IEC 60079-11:1999 e IEC 60079-18:2004.**

Marcação básica do produto: **BR-Ex d e mb ib [ib] IIC T4**
-10 ºC ≤ Tamb ≤ +60 ºC

Número do Relatório de Avaliação e Ensaio: **BR1471/ Volume 1/ Seção 1/ 2006**

A empresa licenciada, responsável pelo produto referenciado neste certificado, tem a responsabilidade de garantir que o produto está em conformidade com as especificações descritas no Apêndice a este certificado e que a mesma executa as verificações e ensaios de rotina aplicáveis.

De acordo com a Portaria nº **83 de 03 de abril de 2006** e **RAC** do INMETRO, a empresa licenciada está autorizada a ostentar a Marca de Conformidade da UL do Brasil Certificações sobre o(s) produto(s) relacionado(s) neste certificado.

Emissão: **01 de setembro de 2006**
Revisão: **-----**
Validade: **31 de agosto de 2008**

Pela UL do Brasil Certificações

Marco Antonio Buccjarelli Roque
Presidente

Esta licença acompanhada de seu apêndice está vinculada a um contrato e ao(s) endereço(s) acima citado(s).

Este Certificado só é válido acompanhado de seu Apêndice.

Certificação de Produto
OCP 0029
UL BR

UL DO BRASIL CERTIFICAÇÕES
Rua Fidêncio Ramos, 195 – 5 andar
04551-010 Vila Olímpia – São Paulo – SP – Brasil
CNPJ: 04.830.102/0001-95

41-IC-F0027
Rev.: 1.1

 © R. STAHL HMI Systems GmbH / OperatingInstruction_Exicom_OpenHMI_en_V_1_6_E.doc / 14.11.2007

11.1.5 Gost certificate

☞ Comment:
The Gost certificate listed here is only valid for the operator interfaces of hardware revision 1 (without the 1. supplement) !
You can find the complete certificate at chapter 9 of the hardware manual, it can be downloaded from the homepage of R. STAHL HMI Systems GmbH or you can request it by R. STAHL HMI Systems GmbH.

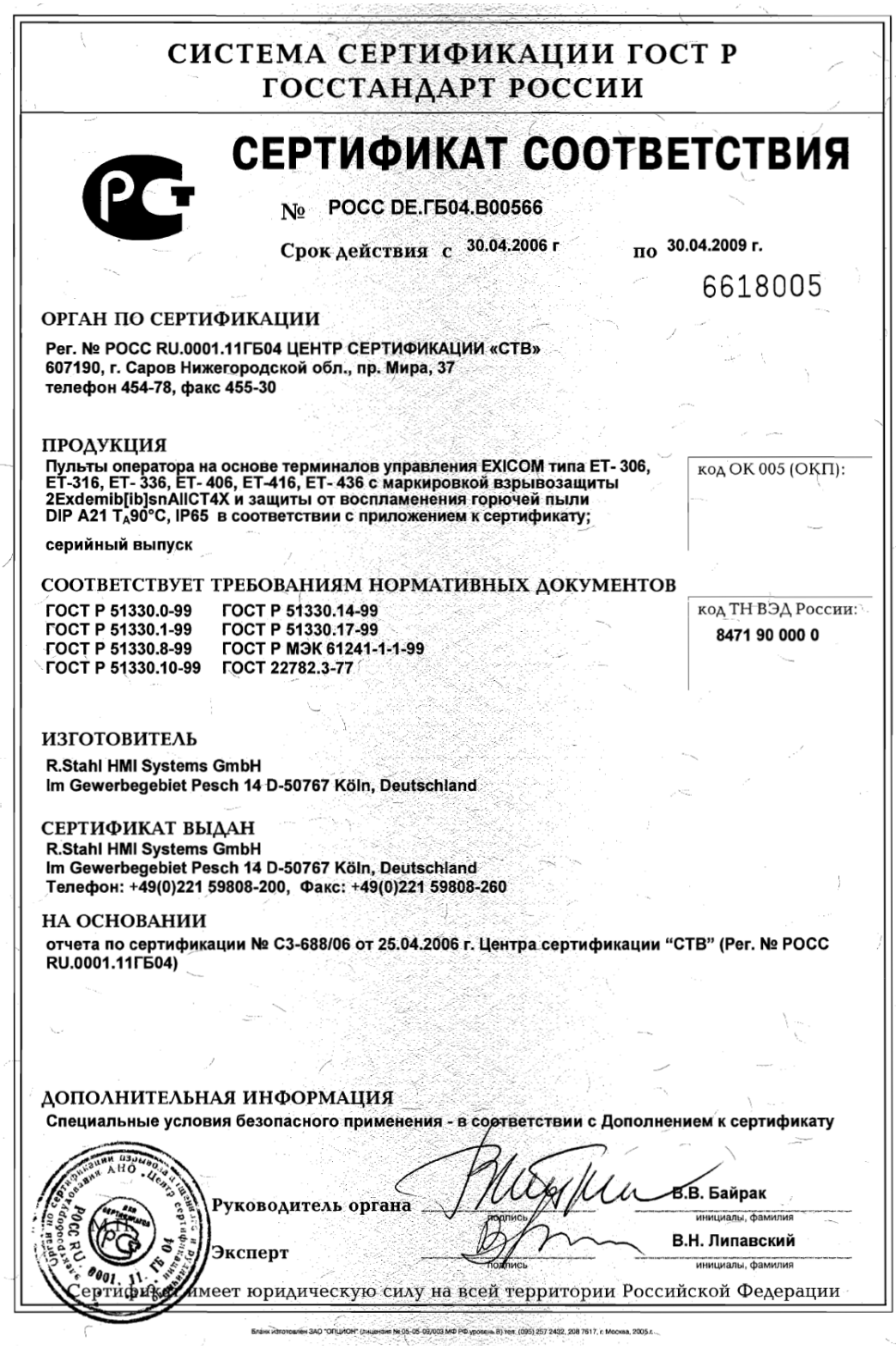

СИСТЕМА СЕРТИФИКАЦИИ ГОСТ Р
ГОССТАНДАРТ РОССИИ

СЕРТИФИКАТ СООТВЕТСТВИЯ

№ РОСС DE.ГБ04.В00566

Срок действия с 30.04.2006 г по 30.04.2009 г.

6618005

ОРГАН ПО СЕРТИФИКАЦИИ

Рег. № РОСС RU.0001.11ГБ04 ЦЕНТР СЕРТИФИКАЦИИ «СТВ»
607190, г. Саров Нижегородской обл., пр. Мира, 37
телефон 454-78, факс 455-30

ПРОДУКЦИЯ

Пульты оператора на основе терминалов управления EXICOM типа ET- 306, ET-316, ET- 336, ET- 406, ET-416, ET- 436 с маркировкой взрывозащиты 2Exdemib[ib]snAIICT4X и защиты от воспламенения горючей пыли DIP A21 T_A90°C, IP65 в соответствии с приложением к сертификату;

серийный выпуск

код ОК 005 (ОКП):

СООТВЕТСТВУЕТ ТРЕБОВАНИЯМ НОРМАТИВНЫХ ДОКУМЕНТОВ

ГОСТ Р 51330.0-99	ГОСТ Р 51330.14-99
ГОСТ Р 51330.1-99	ГОСТ Р 51330.17-99
ГОСТ Р 51330.8-99	ГОСТ Р МЭК 61241-1-1-99
ГОСТ Р 51330.10-99	ГОСТ 22782.3-77

код ТН ВЭД России:
8471 90 000 0

ИЗГОТОВИТЕЛЬ

R.Stahl HMI Systems GmbH
Im Gewerbegebiet Pesch 14 D-50767 Köln, Deutschland

СЕРТИФИКАТ ВЫДАН

R.Stahl HMI Systems GmbH
Im Gewerbegebiet Pesch 14 D-50767 Köln, Deutschland
Телефон: +49(0)221 59808-200, Факс: +49(0)221 59808-260

НА ОСНОВАНИИ

отчета по сертификации № С3-688/06 от 25.04.2006 г. Центра сертификации "СТВ" (Рег. № РОСС RU.0001.11ГБ04)

ДОПОЛНИТЕЛЬНАЯ ИНФОРМАЦИЯ

Специальные условия безопасного применения - в соответствии с Дополнением к сертификату

Руководитель органа _____ В.В. Байрак
подпись инициалы, фамилия

Эксперт _____ В.Н. Липавский
подпись инициалы, фамилия

Сертификат имеет юридическую силу на всей территории Российской Федерации

Бланк изготовлен ЗАО "ОПЦИОН" (лицензия № 05-05-09/003 МФ РФ уровень А) тел. (095) 257 2422, 208 7617, г. Москва, 2005 г.

СИСТЕМА СЕРТИФИКАЦИИ ГОСТ Р
ГОССТАНДАРТ РОССИИ

1259509

ПРИЛОЖЕНИЕ

К сертификату соответствия № РОСС DE.ГБ04.В00566

Перечень конкретной продукции, на которую распространяется действие сертификата соответствия

код ОК 005 (ОКП) / код ТН ВЭД СНГ	Наименование и обозначение продукции, ее изготовитель	Обозначение документации, по которой выпускается продукция
8471 90 000 0	Терминалы управления для систем автоматизации EXICOM типа ET- 306, ET-316, ET- 336, ET- 406, ET-416, ET- 436 с маркировкой взрывозащиты 2Exdemib[ib]sIICT4X и защиты от воспламенения горючей пыли DIP A21 T_A90°C, IP65 (R.Stahl HMI Systems GmbH, Германия)	ГОСТ Р 51330.0-99 ГОСТ Р 51330.1-99 ГОСТ Р 51330.8-99 ГОСТ Р 51330.10-99 ГОСТ Р 51330.17-99 ГОСТ 22782.3-77 ГОСТ Р МЭК 612-41-1-1-99
8471 90 000 0	Блок интерфейса для подключения оптоволоконного кабеля типа RJ1710 с маркировкой взрывозащиты 2ExnAsIICT4, (Emerson Process Management Ltd, Великобритания)	ГОСТ Р 51330.0-99 ГОСТ Р 51330.14-99 ГОСТ 22782.3-77

Руководитель органа _____ **В.В. Байрак**
подпись — инициалы, фамилия

Эксперт _____ **В.Н. Липавский**
подпись — инициалы, фамилия

М.П.

Бланк изготовлен ЗАО "ОПЦИОН" (лицензия № 05-05-09/003 МФ РФ уровень В) тел. (095) 257 2432, 208 7617, г. Москва, 2004 г.

11.2 Phoenix Contact terminal block

11.2.1 EC type examination certificate

KEMA

Translation, original language: German

(1) **EC-TYPE EXAMINATION CERTIFICATE**

(2) **Equipment and protective systems intended for use in potentially explosive atmospheres - Directive 94/9/EC**

(3) EC-Type Examination Certificate Number: **KEMA 01ATEX2134 U**

(4) Component: **Terminal Blocks MBK 3/E-Z; MBK 6/E**
Protective Conductor Terminal Block MSLKG 6

(5) Manufacturer: **Phoenix Contact GmbH & Co. KG**

(6) Address: **Flachsmarktstraße 8, D-32825 Blomberg, Germany.**

(7) This component and any acceptable variation thereto is specified in the schedule to this certificate and the documents therein referred to.

(8) KEMA Quality B.V., notified body number 0344 in accordance with Article 9 of the Council Directive 94/9/EC of 23 March 1994, certifies that this component has been found to comply with the Essential Health and Safety Requirements relating to the design and construction of equipment and protective systems intended for use in potentially explosive atmospheres given in Annex II to the directive.

The examination and test results are recorded in confidential report no. 2092788.

(9) Compliance with the Essential Health and Safety Requirements has been assured by compliance with:

EN 60079-0 : 2004 **EN 60079-7 : 2003** **EN 50281-1-1 : 1998 + A1**

(10) The sign "U" placed after the certificate number indicates that this certificate describes components and must not be mistaken for a certificate intended for an equipment or protective system. This EC-Type Examination Certificate may be used as a basis for certification of an equipment or protective system.

(11) This EC-Type Examination Certificate relates only to the design, examination and tests of the specified component according to the Directive 94/9/EC. Further requirements of the directive apply to the manufacturing process and supply of this component. These are not covered by this certificate.

(12) The marking of the component shall include the following:

Ex **II 2 G D Ex e II**

Arnhem, 15 May 2006
KEMA Quality B.V.

T. Pijpker
Certification Manager

Re-issued
Page 1/3

PRODUCTS HVAC 001

© Integral publication of this certificate and adjoining reports is allowed. This Certificate may only be reproduced in its entirety and without any change.

KEMA Quality B.V. Utrechtseweg 310, 6812 AR Arnhem P.O. Box 5185, 6802 ED Arnhem The Netherlands
T +31 26 3 56 20 00 F +31 26 3 52 58 00 customer@kema.com www.kema.com Registered Arnhem 09085396

Experience you can trust.

(13) # SCHEDULE

(14) **to EC-Type Examination Certificate KEMA 01ATEX2134 U**

(15) **Description**

The Terminal Blocks (all colours) MBK 3/E-Z and MBK 6/E as well as the Protective Conductor Terminal Block MSLKG 6 with accessories, are intended for the connection of copper conductors in enclosures in type of protection increased safety "e" or "D" (dust).
Fixing is made on mounting rails type NS 15 according to EN 60715-TH 15.

Operating temperature range: -50 °C ... +110 °C.

Electrical data

Terminal blocks

Type:	**MBK 3/E-Z**		**MBK 6/E**	
Rated insulation voltage [V]	250		250	
Rated voltage [V]	275		275	
- with skipping jumper [V]	176		275	
Nominal current [A]	22,5		37	
Max. load current [A] with jumper	28		49	
- rated cross section [A]	22		33	
- max. conductor cross section [A]	25,5		39,5	
Rated cross section [mm²] (AWG)	2,5 (14)		6 (10)	
Connectable conductor cross section				
- rigid [mm²] (AWG)	0,2 - 4	(24 - 12)	0,5 - 10	(20 - 8)
- flexible [mm²] (AWG)	0,2 - 2,5	(24 - 14)	0,5 - 6	(20 - 10)
Multi-conductor connection (2 conductors with same cross section and conductor type)				
- rigid [mm²] (AWG)	0,2 - 1,5	(24 - 16)	0,5 - 2,5	(20 - 14)
- flexible [mm²] (AWG)	0,2 - 1,5	(24 - 16)	0,5 - 2,5	(20 - 14)

Protective conductor terminal block

Type:	**MSLKG 6**	
Rated cross section [mm²] (AWG)	6 (10)	
Connectable conductor cross section		
- rigid [mm²] (AWG)	0,5 - 10	(20 - 8)
- flexible [mm²] (AWG)	0,5 - 6	(20 - 10)

A051E1.0
MEAN-P-Ex31 v2.0

Page 2/3

 © R. STAHL HMI Systems GmbH / OperatingInstruction_Exicom_OpenHMI_en_V_1_6_E.doc / 14.11.2007

(13) # SCHEDULE

(14) **to EC-Type Examination Certificate KEMA 01ATEX2134 U**

Installation instructions

The Terminal Blocks and the Protective Conductor Terminal Block are suitable for use in enclosures in atmospheres with flammable gases or combustible dust. For flammable gases these enclosures must satisfy the requirements according to EN 60079-0 and EN 60079-7. For combustible dust these enclosures must satisfy the requirements according to EN 50281-1-1.
When assembling with other certified series and sizes and using belonging accessories, the required creepage distances and clearances have to be observed.

Regarding the use of covers, cross-connectors and end brackets the instructions of the manufacturer must be followed.

If smaller cross sections as the rated cross section are used, the belonging lower current has to be laid down in the EC-Type Examination Certificate of the complete apparatus.

The Terminal Blocks may be used, based on the self-heating when used at the above mentioned rated current and at ambient temperatures of -50 °C to +40 °C at the mounting position in electrical apparatus, e.g. junction and connection boxes, for temperature class T6. When the Terminal Blocks are used in electrical apparatus of temperature classes T1 up to T5, the highest temperature of the insulating material shall not exceed the maximum value of the operating temperature range.

Routine tests

Routine dielectric strength tests according to EN 60079-7, Clause 7.2 in combination with Clause 6.1, have to be carried out.

(16) **Report**

KEMA No. 2092788.

(17) **Special conditions for safe use**

None.

(18) **Essential Health and Safety Requirements**

Covered by the standards listed at (9).

(19) **Test documentation**

As listed in Test Report No. 2092788.

Page 3/3

KEMA

translation **AMENDMENT 1** original language : German

to EC-Type Examination Certificate KEMA 01ATEX2134 U

Manufacturer: **Phoenix Contact GmbH & Co. KG**

Address: **Flachsmarktstraße 8, D-32825 Blomberg, Germany**

Description

In future the Series Terminal Blocks Types MBK 3/E-Z and MBK 6/E and Protective Conductor Terminal Block Type MSLKG 6 may also be constructed according the documentation stated below.

The change concerns the extension of the operating temperature to –50°C to +80°C.

All other data remain unchanged.

Test documentation

	dated
1. Description (3 sheets)	07.09.2001 / 20.09.2001

Arnhem, 15 September 2003
KEMA Quality B.V.

T. Pijpker
Certification Manager

[2036532]
Page 1/1

© This Amendment may only be reproduced in its entirety and without any change